CD inside contains the latest User Manuals and firmware

CAR-14

Crossing Alarm Reporter

User Manual

Micro-Aide

Rail Signal Products

EVENT RECORDERS ALARM REPORTERS DATA LOGGERS
CLOCK SYNCHRONIZERS CURRENT SENSORS VOLTAGE MONITORS
BATTERY MONITORS LIGHT OUT DETECTORS CUSTOM ENGINEERING

Micro-Aide

www.micro-aide.com

Rail Signal Products

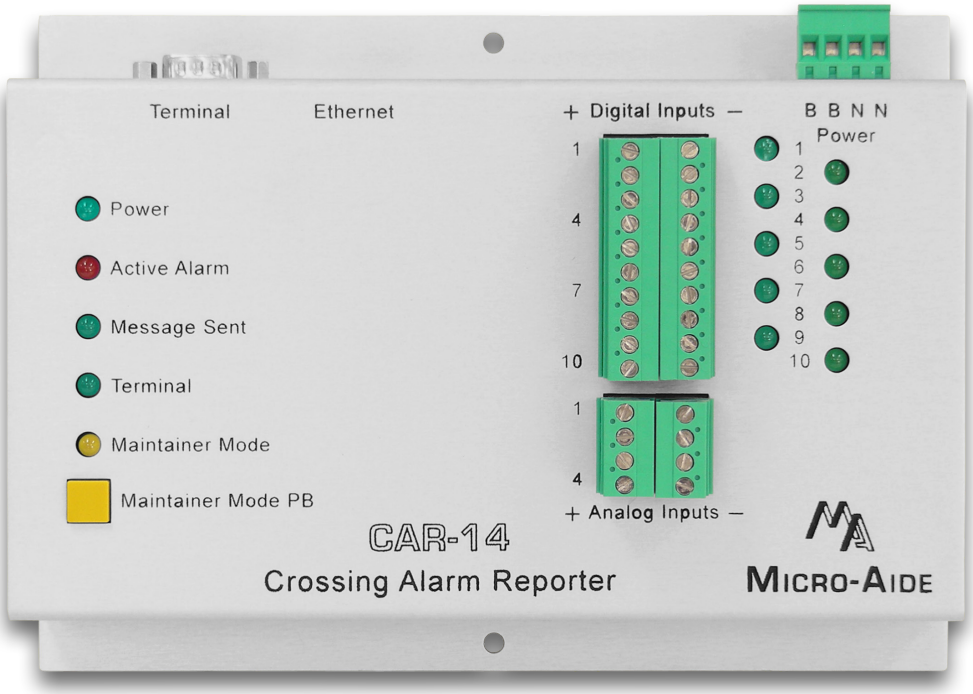

CAR-14
Crossing Alarm Reporter
User Manual

Revised: June 24, 2014

Micro-Aide Corporation Tel: 626-915-5502 Fax: 626-331-9484 E-mail: support@micro-aide.com
685 Arrow Grand Circle Covina, CA 91722

Copyright© 2011 by MICRO-AIDE Corporation

All rights reserved. No part of this document may be reproduced or transmitted in any form or by any means without the written permission of MICRO-AIDE Corporation.

The information in this document is subject to change without notice. MICRO-AIDE believes the information contained in this document to be accurate. However, MICRO-AIDE assumes no responsibility for any errors or omissions.

Windows, Windows XP and Windows 7 are registered trademarks of Microsoft Corporation.

HyperTerminal is a registered trademark of Hilgraeve Inc.

Tera Term is a registered trademark.

Ethernet is a registered trademark of Xerox Corporation.

AirLink and Raven X are trademarks of Sierra Wireless, Inc.

Table of Contents

Chapter 1 – General Description

Introduction . . . 1
Key Features. . . . 2
Comparing the CAR-14 and CAR-24 . . . 3
Firmware Modification History . . . 4
Setup Database Compatibility . . . 4
About this Manual. . . . 4

Chapter 2 – Installation

Introduction . . . 7
Unpacking. . . . 7
Initial Check-Out Procedure . . . 7
Installation Procedure. . . . 11
- Location . . . 11
- Mounting . . . 11
- Site Preparation . . . 11
- Peripheral Equipment . . . 12
  - Terminal Port. . . . 12
  - Ethernet Port. . . . 12
- Cabling. . . . 12
  - Power . . . 12
  - Input Circuits . . . 12

Chapter 3 – Setup

Introduction . . . 13
Logging On . . . 13
User Interface Conventions . . . 13
- Fields and Commands . . . 13
  - Working with Fields . . . 14
  - Completing Commands. . . . 14
- Data Flow Control . . . 15

Setup Procedure - Site Specific Data Only . . . 15
- Site Specific Information (F) . . . 15
  - State . . . 16
  - Subdivision. . . . 16
  - DOT Number. . . . 16
  - Time Zone . . . 16
  - Daylight Saving Time . . . 16

TC

DNS Name . . . 16
Analog Configuration . . . 16
Time / Date (C) . . . 17
Manual Method . . . 18
Time Server Method . . . 18
Print Setup Data (P) . . . 18
Transfer Files (T) . . . 19
Download Setup Data (D) - Saving the Database . . . 19
Upload Setup Data (U) - Restoring the Database . . . 20
Log Off (X) . . . 20
Setup Procedure - All Setup Data . . . 21
Parameters Previously Described . . . 21
Setup (S) . . . 22
Reset Setup (R) . . . 22
System Parameters (S) . . . 23
Input Names (I) . . . 26
Detect Times (D) . . . 26
Virtual Inputs (V) . . . 27
Network (N) . . . 29
HTTP Server (H) . . . 31
Alarm Configuration (L) . . . 32

Chapter 4 – Operation

TC

Introduction . . . 35
Front Panel Features . . . 35
Status Indicators . . . 35
Digital Input Indicators . . . 35
Maintainer Mode Pushbutton . . . 36
Control of Maintainer Mode . . . 36
Control of Remote Port Mode . . . 36
Connecting Remotely . . . 36
Operational Commands . . . 37
Remote Port (R) . . . 37
Connecting the Alternate Device to the Terminal Port . . . 37
Enable Remote Port Mode . . . 39
Terminate Alternate Device Session . . . 39
Disable Remote Port Mode . . . 39
Front Panel Control of Remote Port Mode . . . 40
Live Status (L) . . . 40
Alarm Status . . . 41
Digital Input Status . . . 41
Analog and Virtual Input Status . . . 41
Print Log (P) . . . 41

Chapter 5 – Maintenance

Introduction . . . 43
Working Inside the Reporter . . . 43
Replacing the Fuse . . . 43

Diagnostic Testing 44
Checksum Test Program Memory (C) 44
Flash Memory Test (F) 45
Ethernet Test (E) 45
Send Health Check Message (H) 45
Temperature (T) 46
Light LEDs (L) 46
Updating the Firmware 46
Trouble-Shooting Guide 48

Appendix A – Technical Data

Specifications 51
Terminal Port Cable 52

Appendix B – Alarm Configuration Table

Introduction 53
Alarm Definitions 53

TC

TC

Chapter 1 – General Description

Introduction

Since 1988 MICRO-AIDE has provided the rail signal industry with a broad range of recording devices and systems that vary in capacity, size and features. MICRO-AIDE has developed a great deal of expertise in the field of railroad signal monitoring. This expertise has been used to create a new family of products referred to as Crossing Alarm Reporters (CAR). The product family consists of two devices, the CAR-14 and CAR-24. The former is the subject of this User Manual.

The CAR-14 was designed to monitor signals at a crossing for the purpose of detecting and then reporting specific fault conditions. The most unique aspect of the CAR-14 is its ability to transmit Alarm messages to a message processing server. Alarm messages are coded in accordance with specific formatting rules. Typically, they are transmitted via a Virtual Private Network (VPN) using a variety of Internet-based protocols and methodologies.

Union Pacific defined the requirements for a CAR-based alarm generation and processing system. The CAR-14 is one component of this system. The VPN used by the Reporter is maintained and operated exclusively by Union Pacific. The message processing server is also under the control of Union Pacific. Access to the VPN is accomplished using a wireless modem device. Union Pacific selected the Sierra Wireless Raven X® for use in the system. Figure 1 illustrates the basic relationship of the major system components.

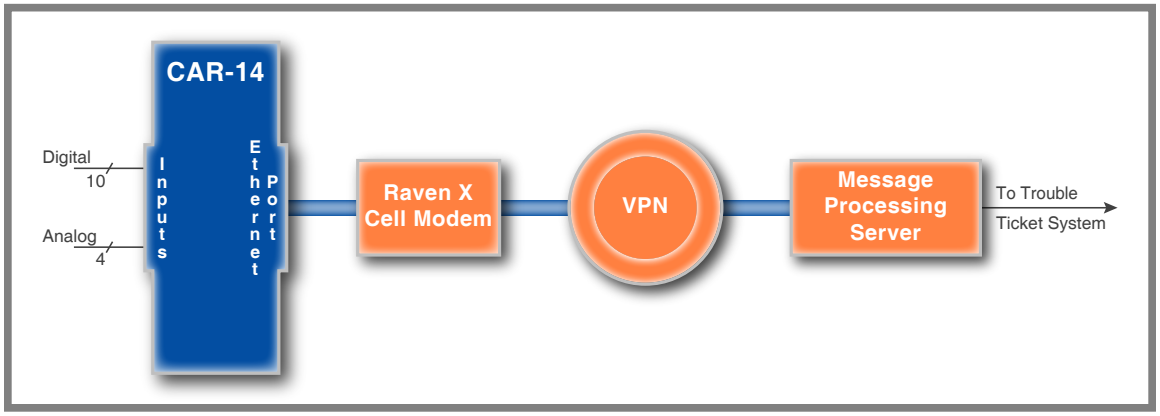

Figure 1: System Components

The CAR14 features ten Digital and four Analog Inputs. The operation of all inputs is completely non-intrusive to the signaling system. High input impedances and an isolated, internal power supply allow the Reporter to be used safely. Front panel mounted LEDs are used to indicate the state of each Digital Input. Digital Inputs are typically wired to indications such as XR, gate down, gate up, etc. The Analog Inputs are used to monitor batteries.

The single-screen Alarm Configuration Table allows the CAR-14 to report as many as 20 different crossing-related Alarms. Like an Event Recorder, the CAR-14 utilizes a Setup Database to determine various aspects of its operation. The contents of the Alarm Configuration Table are part of the Setup Database. The database is saved in the non-volatile memory of the Reporter. Accordingly, power losses will not result in loss or corruption of the Setup Database's information. The database can be saved to a PC file, reload-

ed and modified as required. Although the contents of the database are largely predefined by Union Pacific, the user is able to assign various site-specific parameters (e.g., location related information).

Eight programmable Virtual Inputs are used to augment the flexibility of the Alarm Configuration Table. Virtual Inputs allow the user to define important logical associations among various Digital, Analog and other Virtual Inputs. The Virtual Input feature can be used to detect possible fault conditions of a logical nature (e.g., one relay is up while another is down).

The flexibility of the Alarm Configuration Table is further enhanced by the use of various timed measurements. Potential fault conditions are ignored until their duration exceeds specific requirements. A low battery voltage represents a potential fault condition. However, it does not generate an Alarm until its persistence exceeds a predefined limit value.

Alarm and Health Check messages are sent using the HTTP-Get method. Validation and retransmission techniques are employed to insure that accurate and complete messages are delivered to the message processing server.

Maintainer Mode allows the user to temporarily suspend the reporting of Alarms. This can be useful when the maintainer is performing tests of the crossing equipment. As a safeguard, normal operation of the Reporter will occur after a predefined interval if the maintainer forgets to exit Maintainer Mode.

The network interface of the CAR-14 provides for automatic and manual modes of operation. In automatic mode, the Reporter uses the Dynamic Host Configuration Protocol (DHCP) to acquire a leased IP address and other network access parameters. Alternatively, these parameters can be assigned by the user when the CAR-14 is in manual mode. Manual mode is typically used when the Reporter is part of a LAN utilizing fixed IP addresses.

The serial Terminal Port of the Reporter also includes two modes of operation. In Terminal Port Mode, the port provides local access to the Reporter using a PC and a communications application (e.g., HyperTerminal® or Tera Term®). In Remote Port Mode, the Terminal Port can be connected to a secondary piece of crossing equipment. A Telnet connection to the Reporter's Ethernet® Port then allows a remote user to access the secondary piece of crossing equipment.

The time stamping of messages is controlled by the Reporter's internal, real-time clock. A network-based time server is accessed periodically to insure the Reporter's clock is kept accurate.

All MICRO-AIDE rail signal products, including the CAR-14, are designed to be easy to use and maintain. Each design is based upon the premise that value and reliability start with attention to detail and a concern for usability rather than needless complexity. Our goal in creating the CAR-14 was to provide the rail signal industry with an instrument maintainers and signal technicians will find easy to operate long after the device has been installed and set up.

Key Features

Additional features of the Crossing Alarm Reporter include the following:

- XR active too long, gate not down, gate not up, low battery voltages and loss of AC power Alarms are reported automatically.
- Site-specific information such as the state, subdivision and DOT number can be assigned by the user.
- The name of an accessible Domain Name Server (DNS) can be assigned.
- SNTP-Unicast is used to access primary and secondary time servers.
- The time zone setting of the Reporter can be assigned to any of seven zones used in North America.
- Automatic adjustment for Daylight Saving Time (DST) can be enabled or disabled. The DST feature is in full compliance with the Energy Policy Act of 2005 which took effect in 2007.
- Each Digital Input utilizes opto-isolation technology to provide ground isolation of at least 3800 Vdc.

- Relay signals in the range from 9 to 36 Vdc can be sensed by the Digital Inputs.
- Digital Inputs can be used to sense positive and negative voltages.
- Digital Input Detection Times can be set by the user on an input-by-input basis. Default values are provided as an aid to the user.
- Analog Inputs can range from 0 to 51.1 Vdc with a resolution of .1 Vdc.
- Analog Inputs are tested against separate Low and High Limit Values that are assigned by the user.
- The internal Ethernet Port complies with the 10/100 Base-T standard at speeds of 10 and 100 Mbps.
- Maximum power consumption is less than 2 W. A 9 to 36 Vdc power source can be used to power the Reporter.
- The internal temperature of the Reporter is measured and tested against user-assigned Limit Values.
- Periodic Health Check messages are sent to the message processing server. This technique is used to insure that the Reporter and network are functioning normally.
- Several diagnostic commands are available to test important functions of the Reporter.
- User access is supported by a serial Terminal Port and Ethernet-based Telnet connection.
- Two distinct levels of password security provide protection against unauthorized access.
- The user interface provides full cursor control when using a PC.
- Firmware updates can be uploaded to the Reporter locally via the Terminal Port, or remotely via the Ethernet Port.
- Installation is quite simple. Input wires are terminated in detachable, screw-down terminals. Wire sizes as large as 12 AWG can be used.

COMPARING THE CAR-14 AND CAR-24

The CAR-14 and CAR-24 are similar products in one very important regard. Their Crossing Alarm Reporting capabilities are identical. Both products interact with the Raven X cell modem, Union Pacific VPN and message processing server in the same manner. Both are able to report crossing-related Alarm and Health Check messages. However, the CAR-14 was designed to perform as an Alarm reporting device only. It does not provide additional features that are typically associated with an Event Recorder.

Most of the recording features of MICRO-AIDE's CWR-24E Event Recorder have been included as capabilities of the CAR-24 . This makes the CAR-24 a hybrid product. It can be used as an Alarm reporting device as well as an Event Recorder that is ideally suited to crossing applications. The hardware design of the CAR-24 is, in fact, a specific configuration of the CWR-24E.

Table 1 summarizes the important distinctions between the CAR-14 and CAR-24.

Feature	CAR-14	CAR-24
Digital Inputs	10	20
Digital Input LEDs	10	none
USB Host Port	not available	std.
USB Device Port	not available	std.
Front panel keypad and LCD	not available	std.
Relay output	not available	1
Event Record capacity	not applicable	302,084 (std.)

Table 1: CAR-14 and CAR-24 Differences

Firmware Modification History

Features have either been introduced or modified as the result of the following firmware modifications.

V1.00 Initial release.

V1.01 Added "Ensure that Caps-Lock is off" text message when log-in fails.

V1.02 Improved DHCP error handling. Added ability to escape from Remote Port Mode to Terminal Port Mode. MAC address is preserved when uploading a new Setup Database.

V1.03 Corrected problem with Ethernet Port not timing out after 5 minutes when idle.

V1.04 Site-specific changes to the Setup Database were not being properly saved.

V1.05 Corrected a problem with Telnet sessions failing to change the Terminal Port Baud rate.

V1.06 Changed the execute report character used by several commands to include **Ctrl+W** and **Ctrl+E**.

Setup Database Compatibility

Occasionally, modifications to the firmware of the device will result in a new memory map of the Setup Database. When this occurs, the previously created Setup Database becomes incompatible with the new firmware. Table 2 details the compatibility status of each firmware version. A green check mark (☑) indicates compatibility with the previous Setup Database. A red X (☒)indicates that a new Setup Database will have to be created for the firmware version listed.

Firmware Version	Compatibility
V1.00	
V1.01	☑
V1.02	☑
V1.03	☑
V1.04	☑
V1.05	☑
V1.06	☑

Table 2: Setup Database Compatibility

Never attempt to use an incompatible Setup Database. The operation of the device can be severely impacted.

About this Manual

This document is intended to provide the user with comprehensive, easy-to-read instructions on how to install, set up, operate and maintain the MICRO-AIDE CAR-14 Crossing Alarm Reporter. This document refers to Version 1.06 of the CAR-14 firmware. Union Pacific is largely responsible for the creation of Setup Database files. As of this writing, the file named "c14sear2.v100" is the currently approved Setup Database file for use with the CAR-14. The sample data and command details depicted were prepared using a Version 1.06 device running the c14sear2.v100 Setup Database. Wherever possible, step-by-step instructions have been included. In the event the user has questions about any of the described procedures the user should contact MICRO-AIDE for assistance. Additional copies of this manual are available upon request.

Micro-Aide Corporation
685 Arrow Grand Circle
Covina, CA 91722
Tel: 626-915-5502 Fax: 626-331-9484
E-mail: support@micro-aide.com

The MICRO-AIDE "Material Return" and "Limited Warranty" policies can be found on the inside back cover of this manual.

The next chapter describes how to install a CAR-14.

User Notes

Chapter 2 – Installation

Introduction

This chapter describes how to properly unpack, check-out and install the CAR-14 prior to operation. It is advisable to perform the Initial Check-Out Procedure before attempting to set up the Reporter.

Unpacking

Each CAR-14 is packed in a shipping carton that is properly sized for the Reporter. Abundant packing materials are provided to minimize mechanical shock to the contents. Before opening the carton inspect it for damage. Damage to the carton should be noted. Carefully remove the Reporter. It is advisable to save all packing materials in the event the Reporter ever needs to be returned to MICRO-AIDE.

Inspect the Reporter for visual damage. It should not be scratched, dented or deformed in any way. If it appears the Reporter was damaged in shipment the responsible carrier should be notified immediately. MICRO-AIDE will assist the user in filing a claim in the event damage was sustained during shipment.

Initial Check-Out Procedure

Before the CAR-14 is installed at a crossing facility it is recommended that an operational check of the Reporter be performed. The following materials are required as a part of this procedure.

- 12 Vdc power source.
- Common hook-up wire for power and testing inputs (12 to 22 AWG).
- Wire strippers and small, flat-head screwdriver.
- PC equipped with a communications program (e.g., HyperTerminal or Tera Term) and either a USB port or serial comm port set to operate at 9600 Baud.
- Digital Voltmeter (DVM).

Perform each of the following steps in the sequence listed. If a problem arises, refer to the sections entitled "Diagnostic Testing" on page 44 and "Trouble-Shooting Guide" on page 48. Elements common to most installations are illustrated in Figure 2 on page 8 and Figure 3 on page 9.

1. With the power off, connect the power source positive and negative conductors to either pair of terminals labeled "B" and "N", respectively. They are located at the right end of the Reporter's top panel.
2. Connect the PC's serial comm port to the DE-9 male connector labeled "Terminal". Use the cable provided by MICRO-AIDE or a DE-9 to DE-9 straight-through cable. Figure 7 on page 52 illustrates the proper wiring of the cable.

The c14sear2.v100 Setup Database provided by Union Pacific selects a Terminal Port Baud rate of 9600. The CAR-14 requires 8 data bits, no parity and 1 stop bit (i.e., 8-N-1).

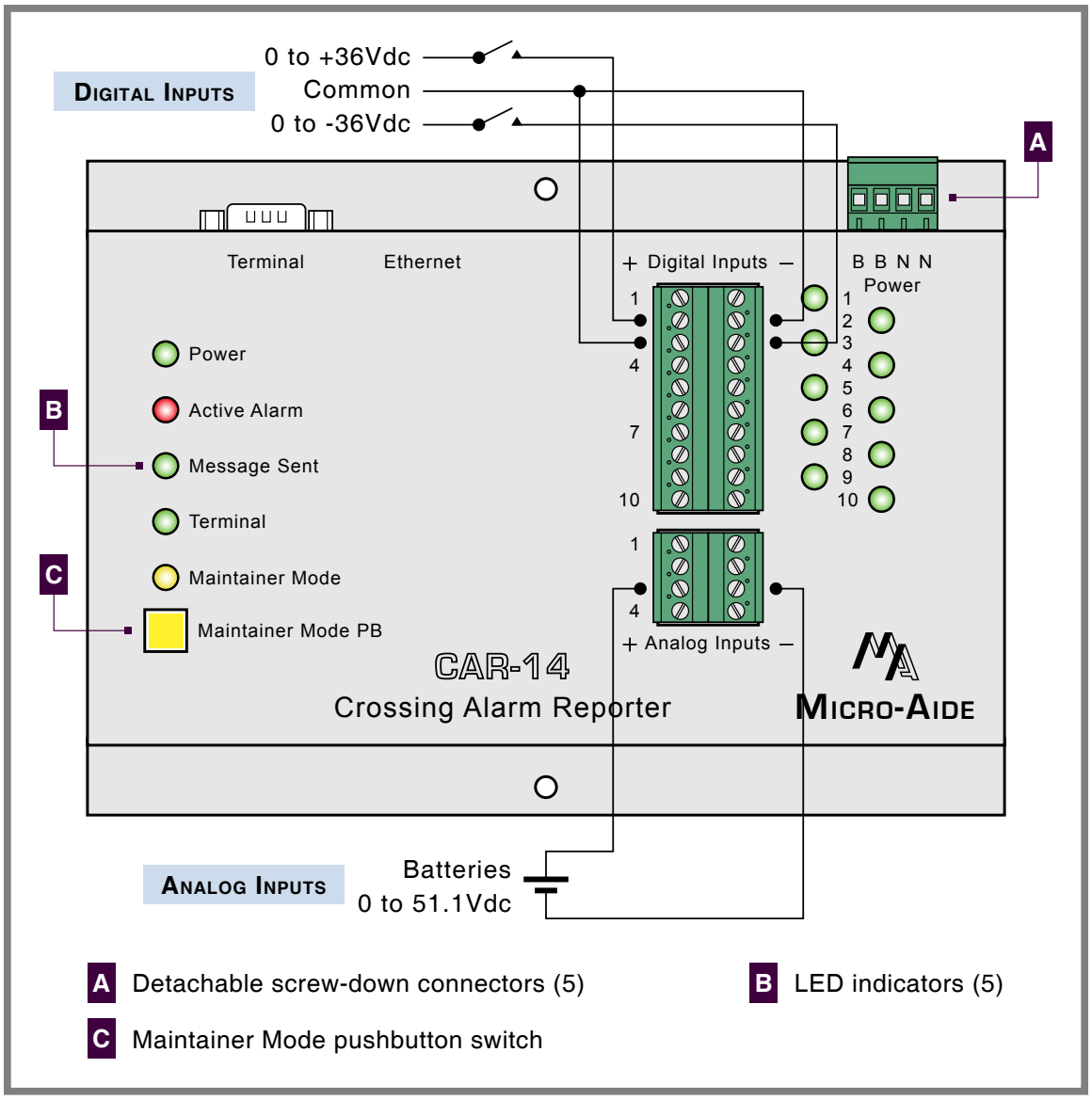

Figure 2: Typical Installation - Front Panel View

2

3. Set the PC to emulate an ANSI terminal. In the case of HyperTerminal, click on the File > Properties command. Select the Settings tab. Enable Terminal keys. Select ANSI from the Emulation drop-down list box.

4. Apply power to the PC. Ensure that the communications program is set for a direct connection to the appropriate communications port.

5. Apply power to the CAR-14. The PC will display the following message.

```
Micro-Aide CAR-14 Flash Boot Loader 1.00
Press ESC for boot loader
```

The preceding boot loader message is always issued at a Baud rate of 38,400. If the Reporter is set to run at 9600 Baud, the message will appear to be garbled. Regardless, do not press the **Esc** key. The user must wait several seconds for the CAR-14 to complete its initialization process.

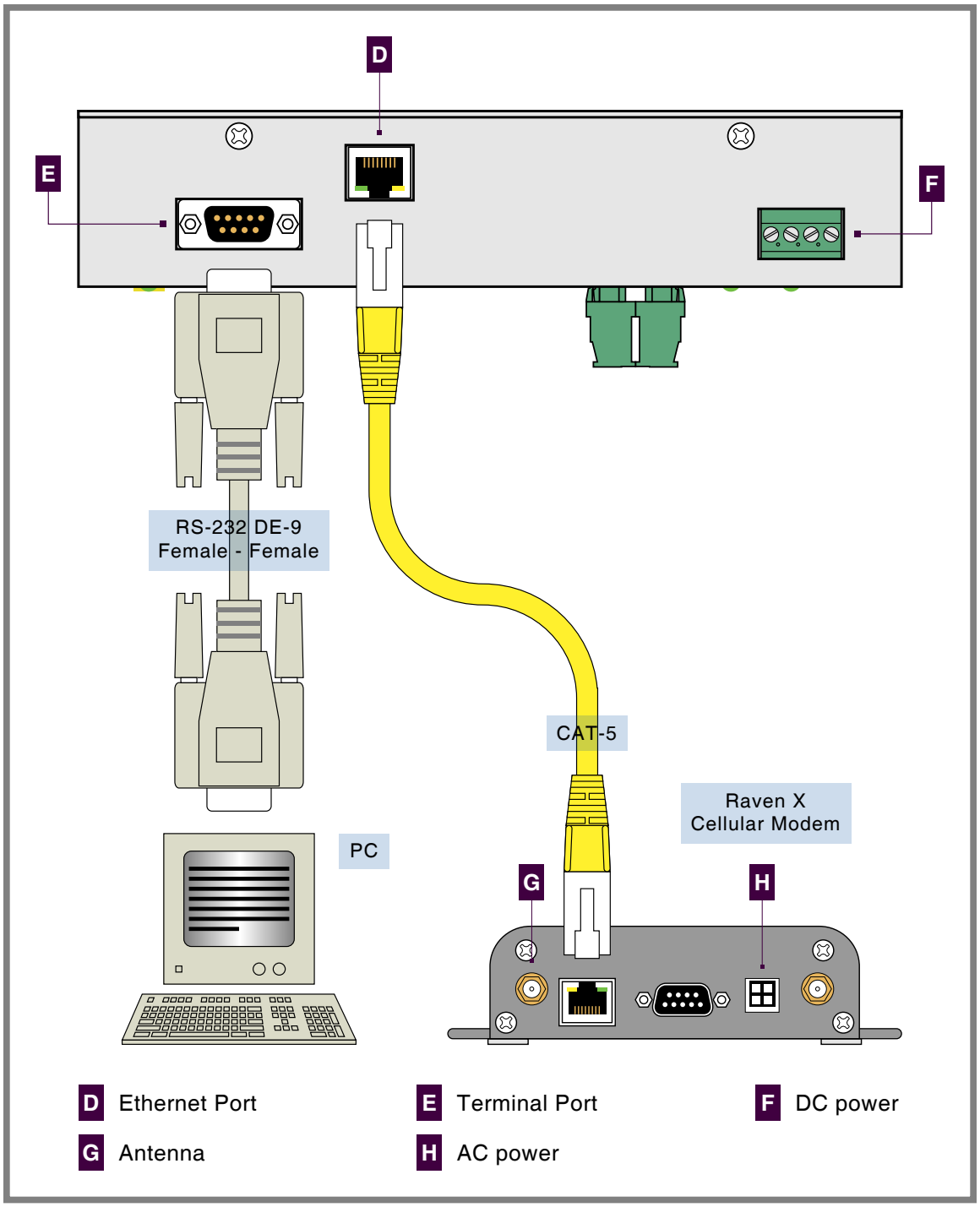

Figure 3: Typical Installation - Top Panel View

6. Verify that the front panel LED labeled "Maintainer Mode" is illuminated. If it is not, press the pushbutton labeled "Maintainer Mode PB" for .5 seconds. The Maintainer Mode LED will should now be illuminated confirming that the CAR-14 is operating in Maintainer Mode. This will prevent any Alarms from being sent to the message processing server while the Reporter is being tested.

7. After the Reporter completes its initialization the following password challenge will be displayed.

```
Model CAR-14 1.06 (C) 2010 MICRO-AIDE INC.

C14sear2.v100

Enter password:
```

Password Request

8. If the Reporter fails to display the password request, check the power and peripheral connections and Baud rate and communications settings. If the problem can be isolated to the CAR-14 contact MICRO-AIDE customer service for instructions on how to proceed.

Repair and return policies are described on the inside back cover of this manual.

9. The remainder of the Initial Check-Out Procedure presumes the Reporter is configured to operate in accordance with the parameters established by the c14sear2.v100 Setup Database. If this is not the case the user may wish to reload the c14sear2.v100 database. Refer to the section entitled "Upload Setup Data (U) - Restoring the Database" on page 20 for details.

10. From the PC's keyboard type **car** in lower-case letters. This is the Union Pacific specified Restricted Password. Complete the entry by pressing the **Enter** key. The Main Menu, shown in the following, will be displayed.

```
                    MICRO-AIDE CAR-14 Alarm Reporter 1.06
                                 C14sear2.v100

                                F Site Specific Information
                                L Live Status
                                C Time/Date
                                P Print Log
                                T Transfer Files
                                D Diagnostics
                                S Setup
                                R Remote Port
                                X Log Off
```

Main Menu

11. Press the **L** key to select the Live Status command. Data similar to the following will be displayed.

```
[ESC]=exit                          Live Status                 15:47:04 04-02-12
            L01: On  B1   XR      : Off    B1      :   0.0Vdc On
            L02: On  B2   D2      : Off    B2      :   0.0Vdc On
            L03: Off 3B   AnaFail : Off    B3      :   0.0Vdc Off
            L04: Off 4B   HiTemp  : Off    B4      :   0.0Vdc Off
            L05: On  IP   GateProb: Off
            L06: On  PK   D6      : Off    V1      : Off
            L07: Off AR   D7      : Off    V2      : Off
            L08: Off TN   D8      : Off    V3      : Off
            L09: Off GC   D9      : Off    V4      : Off
            L10: On  LA   POR     : Off    V5      : Off
            L11: Off                       V6      : Off
            L12: Off                       V7      : Off
            L13: Off                       V8      : Off
            L14: Off
            L15: Off
            L16: Off
            L17: Off
            L18: Off
            L19: Off
            L20: Off
```

Live Status Command

12. Using a short pair of stripped jumper wires, place +12Vdc and negative to Digital Input number 1. Refer to the silkscreened labels located near the input terminals. Positive voltage should be placed on the terminal to the left and negative voltage on the right. The voltage should be held for at least 1.5seconds before proceeding.

13. Verify that the LED associated with the Digital Input under test is now illuminated. Also, verify that the status of the tested input changes from "Off" to "On" as depicted in the Live Status screen.
14. Use the same procedure described in the previous two paragraphs to test the remaining nine Digital Inputs.
15. Connect the 12Vdc positive and negative test leads to the two inputs of Analog Input A1.
16. Verify the Analog Input reading for A1 is within .15Vdc of the correct reading.
17. Use the same procedure described in the previous two paragraphs to test the remaining three Analog Inputs.

This concludes the Initial Check-Out Procedure. This procedure may be used at any time to verify that the CAR-14 is operating properly. Power can now be removed from the Reporter. Connections to the PC should also be removed.

In the event that a failure occurs during any part of this procedure a series of diagnostic tests should be performed. Refer to the sections entitled "Diagnostic Testing" on page 44 and "Trouble-Shooting Guide" on page 48. Alternatively, the user may wish to contact MICRO-AIDE customer service. Instructions on how to proceed will be offered. "Material Return" and "Limited Warranty" policies are described on the inside back cover of this manual.

INSTALLATION PROCEDURE

The following sections describe the recommended Installation Procedure. Elements common to most installations are illustrated in Figure 2 on page 8 and Figure 3 on page 9. The illustrations also depict the location of each connector used in the installation.

LOCATION

The location where the CAR-14 is to be installed should comply with a few simple requirements. The ambient temperature near the Reporter should be in the range from -40°C to 72°C.

MOUNTING

The CAR-14 is designed to be mounted on a flat surface such as a shelf or backboard. The front panel sheetmetal includes two mounting holes .188" in diameter. They are spaced 5.35" apart.

The Raven X cellular modem and PC (if used) should be mounted in accordance with the manufacturer's recommendations.

SITE PREPARATION

The equipment location must have access to a stable 9 to 36Vdc power source. A pair of wires must be run from the power source to the location where the Reporter will be mounted. The CAR-14 wire ends must be stripped approximately 1/4". The stripped ends will be secured by screw-down terminals located along the top panel of the Reporter. One wire must be connected to the positive voltage of the power source and the other wire must be attached to the return of the power source. The screw-down terminals will accept wire sizes as large as 12AWG. The two wires must be properly secured to prevent damage. It is preferable not to run the wires adjacent to electrical equipment such as motors that may generate large electrical disturbances.

The Digital and Analog Inputs also use a screw-down style of detachable connector. Each wire should be tagged with its circuit identity. Each input cable or wire bundle should be secured to prevent damage to the connections at either end.

Peripheral Equipment

If a PC is to be co-located with the CAR-14 an appropriate AC power source must be available. Additional connections can be made as described in the following sections.

Terminal Port

The PC (if used) must be connected to the Terminal Port. The Terminal Port cable should be kept to a minimum distance, preferably less than 20'. MICRO-AIDE provides, as a standard feature, an RS-232 DE-9 to DE-9 cable. The cable is suitable for use with any PC comm port or USB-to-serial adapter cable.

Each Reporter is shipped with a MICRO-AIDE manufactured RS-232 cable. The shield wire in the provided cable is not attached. Consequently, the Reporter chassis and peripheral device are electrically isolated. This further improves the isolation properties of the system.

Ethernet Port

The Ethernet Port of the CAR-14 generally connects to the Ethernet port of the Raven X. In applications involving a LAN, the Ethernet Port of the CAR-14 will typically connect to a network switch. A standard CAT-5 Ethernet cable can be used in either application. The length of the cable must be limited to 50'.

Cabling

Follow the steps listed in the following to complete the cabling installation.

The power and input wires all terminate in connectors that are detachable. The cable installation may be performed more easily if the female connectors are first detached from their male halves that remain secured to the CAR-14 circuit board.

Power

1. Ensure that the power is off at the power source.
2. The two wires from the power source must be secured to either pair of screw-down terminals labeled “B” and “N”, respectively.
3. Connect AC power to the Raven X and PC (if used).

Input Circuits

Fault conditions will only be Alarmed properly if the input circuits are wired correctly to the CAR-14. The correct polarity of Digital and Analog Inputs must be identified.

Digital Input circuits are wired to a pair of ten-position, detachable connectors. Individual pairs are wired to horizontally adjacent terminals. The positive lead of the digital circuit to be monitored must be connected to the left-side terminal labeled “+”. The common, or return, lead of the digital circuit must be connected to the right-side terminal labeled “-”.

Positive and negative voltages can be monitored by a Digital Input, even if they occur from the same circuit. In such cases the circuit is wired to two inputs of the Reporter, one for each polarity. Figure 2 on page 8 illustrates how to connect negative voltage circuits.

Analog Inputs are connected identically to Digital Inputs. The four Analog Inputs terminate in separate connectors also located at the front panel of the Reporter.

The user may wish to verify the proper operation of each input. The “Initial Check-Out Procedure” on page 7 should be used to identify any faulty input wiring.

Once the cabling is completed, power can be applied to the entire system. The Setup Database will likely need to be modified to reflect the requirements of the local site. This is the subject of the next chapter.

Chapter 3 – Setup

Introduction

This chapter describes how to set up the CAR-14 for use in a typical application. The Setup Procedure is described using two different methods. The first is directed towards maintainers and technicians whose set up activity will be limited to assigning site-specific information. This procedure assumes that the user needs to add site-specific information to the c14sear2.v100 Setup Database. The second, and more comprehensive procedure, describes how to modify and/or create an entire Setup Database.

Logging On

User sessions are initiated only after the log-on procedure is completed. Logging on is described in the section entitled "Initial Check-Out Procedure" on page 7. To log on the user must enter the correct password in response to the password challenge. A typical password challenge message is shown in the sample data entitled "Password Request" on page 10.

The CAR-14 incorporates two levels of password security. Each level uses a distinct password. The Restricted Access password allows a user to review all aspects of the Setup Database. Modifications to the Setup Database are limited to parameters that are considered site-specific. The Administrative Access password allows a user full access to all aspects of the Reporter. This includes the unrestricted ability to make changes to the Setup Database.

The c14sear2.v100 Setup Database created by Union Pacific defines the Restricted Access password as **car**. For security reasons, the Administrative Access password is not listed anywhere in this document.

The Main Menu, as shown below, will be displayed after the correct password has been entered.

```
MICRO-AIDE CAR-14 Alarm Reporter 1.06
C14sear2.v100

F Site Specific Information
L Live Status
C Time/Date
P Print Log
T Transfer Files
D Diagnostics
S Setup
R Remote Port
X Log Off
```

Main Menu

User Interface Conventions

The CAR-14 user interface is designed for ease-of-use. Before proceeding further, the user should become familiar with a few simple aspects of the interface.

Fields and Commands

The CAR-14 user interface allows commands and parameter fields to be easily and quickly selected. Commands are listed vertically in a menu. Some commands direct the user to sub-menus containing

additional commands (e.g., Setup command). Fields allow the user to either select or enter parameter values. A specific field is always uniquely associated with a particular command.

To select a command from a menu or a field within a command simply move the rectangular highlight to the location of the desired command or field. Pressing the appropriate arrow keys located on the PC keyboard will move the highlight. The left, right, up and down arrow keys may be used in any sequence to position the highlight.

To execute a command that has been previously selected (i.e., highlighted) simply press the **Enter** key. Alternatively, the command may be executed by pressing the single-letter code listed to the left of the command. Upper- and lower-case letters may be used. Every command listed in a menu has a distinct single-letter code that permits immediate execution of that command.

Working with Fields

The CAR-14 utilizes two types of fields. Selection Fields allow the user to select a parameter from a list of predefined values (e.g., Terminal Port Baud rate). Edit Fields can be set to any alphanumeric value desired by the user (e.g., DOT number).

To change the value of a Selection Field simply press the **Spacebar** on the PC keyboard. The next value from a predefined list of values will be displayed each time the **Spacebar** is pressed. The first value in the list will automatically follow the last value.

Input Names, Detection Times and Limit Values are examples of parameters that are defined by Edit Fields. After the desired Edit Field is highlighted the user may type any combination of alphanumeric characters appropriate to the field. The initial value of the field is completely removed after typing the first character. Consequently, it is not necessary to delete each character that comprises the initial value. Errors in typing can be corrected by using the **Backspace** key. At any time while editing a field the user may press the **Esc** key and thereby restore the field to its previous value.

Upper- and lower-case letters may be used. Limit Values are assigned negative values by preceding the numeric entry with a minus sign. Numeric values that exceed the range of the field are automatically set to the maximum or minimum value (as appropriate) permitted by the range.

To accept the new value assigned to an Edit Field the user can either press the **Enter** key or move the highlight to a new field. The initial value of an Edit Field cannot be restored after the new value has been accepted. When all of the fields contain values suitable to the user the command may be completed.

Once a field has been accepted by pressing the **Enter** key or moving the highlight it may, depending upon the command, be programmed into the Reporter as an updated operating parameter. Accordingly, the acceptance may occur before completion of the command.

Completing Commands

Generally, commands are completed by pressing the **Esc** key. However, pressing the **Esc** key will not complete the command if the user is in the process of editing a field. Pressing the **Esc** key prior to accepting the new value will instead restore the highlighted field to its previous value. To complete a command that requires pressing the **Esc** key, first accept the contents of the last Edit Field by pressing the **Enter** key or moving the highlight to another field.

Some commands are completed by responding to a choice listed in a Selection Field (e.g., No or Yes). In these cases the command is completed by highlighting the desired choice and then pressing the **Enter** key. Pressing the **Esc** key is the equivalent of selecting the default choice (generally the No option). As a rule of thumb, executing the No option will abandon any field changes made prior to the completion.

Other commands are completed by pressing the key described in a prompt message displayed with the command. Prompts are frequently listed with commands as an aid to the user. After the command is completed the user will be returned to the menu that was previously displayed.

DATA FLOW CONTROL

A few of the setup and operational commands can generate considerable amounts of displayed data. If the user wishes to observe this data on the screen of a PC it may be helpful to temporarily pause the data stream being sent by the Reporter. The Pause and Resume commands may be used to provide the required data flow control.

To Pause the data being sent press the **Ctrl** and **S** keys simultaneously. The data flow will be stopped indefinitely. To Resume data flow press the **Ctrl** and **Q** keys simultaneously. This technique can be used to freeze the data at the PC.

Another useful command is the Abort command. At any time during a lengthy data dump the remaining data can be ignored or aborted by pressing the **Esc** key. The user can then issue another command immediately after the Abort is executed rather than wait until the lengthy data dump is completed.

SETUP PROCEDURE - SITE SPECIFIC DATA ONLY

The Setup Procedure described in this section will typically be used by maintainers and technicians. A Restricted Access session will be used to modify a limited portion of the Setup Database. Only modifications to site-specific parameters will be described. It is assumed that the user has logged onto the Reporter using the Restricted Password. The Main Menu should be displayed. Refer to the sample data entitled "Main Menu" on page 13.

Each command will be identified by its name as listed in the menu where it resides. The single-letter code that executes the command will be listed in parenthesis.

It is assumed that the Union Pacific-defined c14sear2.v100 Setup Database has been installed in the CAR-14. The comm port of the PC must be set to operate at a speed of 9600 Baud.

Before proceeding with the Setup Procedure, verify that the front panel LED labeled "Maintainer Mode" is illuminated. If it is not, press the switch labeled"Maintainer Mode PB" for .5 seconds. The Maintainer Mode LED should now be illuminated confirming that the CAR-14 is operating in Maintainer Mode. This will prevent any Alarms from being sent while the Reporter is being set up.

SITE SPECIFIC INFORMATION (F)

Site parameters are grouped within a single Main Menu command. To change any of the settings, start by selecting the Site Specific Information command. A collection of fields with data similar to the following will be displayed.

```
 Site Specific Information
 -------------------------
State                  XX
Subdivision            0000
DOT number             TESTXXX
Time Zone              CST  (UTC-6)
Daylight Saving Time   Enabled
DNS Name      m402555TEST.airlink.uprr.com

    Analog Configuration
Input                  Low Limit  High Limit
-----                 ---------  ----------
A01                      10.4        15.6
A02                      11.2        16.8
A03                       0.0        20.0
A04                       0.0        20.0
```

Site Specific Information Command

The name of each field is listed to the left of each setting. Fields can be modified or skipped as required. A description of each field is provided in the following sections.

State

The State field can be any two-letter abbreviation (e.g., IL or CA).

Subdivision

The Subdivision field can be any four-character designation that further defines the location of the site. The user may wish to consult Union Pacific as regards appropriate designators.

DOT Number

The DOT Number field provides for the seven-character designation that typically forms a valid number.

Time Zone

The Reporter's real-time clock can be periodically synchronized to a time server. The SNTP-Unicast method is employed for this purpose. However, SNTP time data is relative to UTC-0 time (previously known as GMT). To report the correct local time the Reporter must convert UTC time by applying the correct time zone adjustment.

The Time Zone setting can be assigned as one of seven different values that are commonly used in North America. Each setting is explained in Table 3.

Time Zone Code	Description	Shift from UTC (hours)
AST	Atlantic Standard Time	-4
EST	Eastern Standard Time	-5
CST	Central Standard Time	-6
MST	Mountain Standard Time	-7
PST	Pacific Standard Time	-8
AKST	Alaska Standard Time	-9
HAST	Hawaii Standard Time	-10

Table 3: Time Zone Settings

Press the **Spacebar** repeatedly until the required setting is displayed.

Daylight Saving Time

The real-time clock of the CAR-14 can be adjusted automatically to compensate for DST. If enabled, the real-time clock will be shifted by 1 hour on the second Sunday of March and the first Sunday of November. In both cases the clock is adjusted at 2:00 AM.

Press the **Spacebar** as required to enable or disable the DST adjustment.

The DST feature implemented by the CAR-14 is in full compliance with the Energy Policy Act of 2005 which took effect in 2007.

DNS Name

The DNS Name field is used to provide a network name for the CAR-14 site. More specifically, it is the network name assigned to the Raven X cell modem which controls access to the CAR-14. The name must be unique within the network. As many as 40 alphanumeric characters can be used to create the name.

The DNS Name takes the form: modemname.domain. By way of example only, the c14sear2.v100 Setup Database includes the name: m402555TEST.airlink.uprr.com. The user may wish to consult Union Pacific for more information regarding the creation of valid DNS Names.

Analog Configuration

The four Analog Inputs of the CAR-14 are used to measure and report battery voltages. Analog Inputs are identified by the CAR-14 as "A1", "A2", etc. The A-prefix is always used to distinguish Analog from Digital and Virtual Inputs.

Analog Inputs must have operating ranges of 0 to 51.1 Vdc. AC and negative voltages are not measured since only batteries are monitored. The Reporter is able to measure voltages to a resolution of .1 Vdc.

Analog Inputs are constantly compared against two Limit Values. The Low and High Limit Values define ranges of acceptable and unacceptable operation. Outside the acceptable range the input is considered to be in an abnormal state. If this condition persists an Alarm message will be issued.

Figure 4 illustrates the relationship of the Low and High Limit Values to the Analog Input state. The figure depicts an Analog Input that is monitoring a nominal 12 Vdc battery. The figure indicates that the unacceptable range includes all voltages less than 10.4 Vdc and all voltages greater than 15.6 Vdc. The unacceptable range always consists of two portions separated by the acceptable range. If the input is within the range extending from 10.4 to 15.6 Vdc the battery voltage is considered to be acceptable.

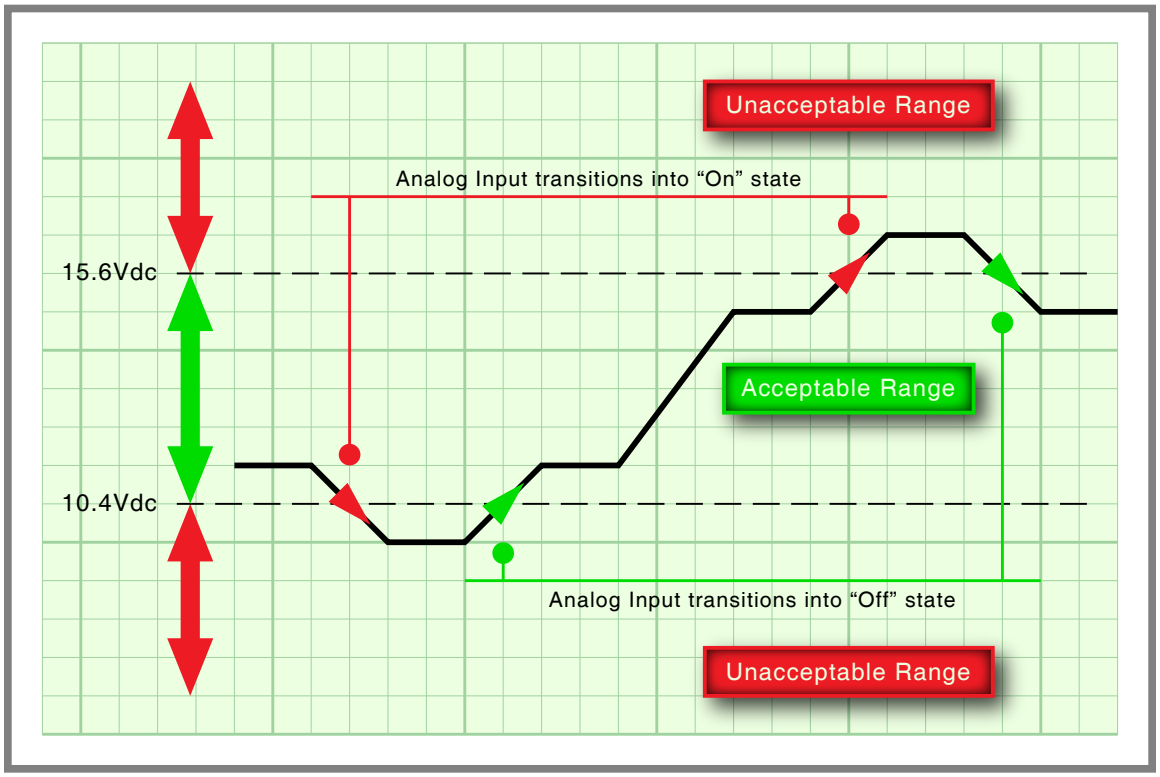

Figure 4: Analog Input Operating Ranges and Limit Values

Analog Inputs with levels within the acceptable range are in an Off state. Conversely, levels found to be within the unacceptable range are in an On state. On and Off states are important to the assignments included in the Alarm Configuration Table. Refer to the section entitled "Alarm Configuration (L)" on page 32 for additional details.

TIME / DATE (C)

The Alarm messages sent by the CAR-14 include a date and time stamp. A Log of various activities is maintained by the Reporter. Log entries are also date and time stamped. The Reporter features a real-time clock circuit whose accuracy is rated at ±3 ppm (±8 seconds per month). It will automatically account for leap year. The clock will continue to keep time accurately during a power outage lasting seven or more days. The time zone used by the Reporter can also be selected. Refer to the section entitled "Time Zone" on page 16 for additional details.

To set the time and/or date execute the Time / Date command. The sample data listed in the following shows a typical response to the Time / Date command.

```
Time/Date

      HH:MM:SS
Time: 15:53:08

      MM-DD-YY
Date: 04-04-12 Wednesday


[F1/^W]=Request SNTP clock sync
```

Time / Date Command

The CAR-14 utilizes a military-style clock. Accordingly, 12:01:02 AM is defined as 00:01:02 and 12:59:58 PM is defined as 23:59:58. The day of week is displayed automatically as determined by the date listed.

The real-time clock can be set by the user by exercising either of two methods. Both methods are described in the following.

Manual Method

Move the highlight to one of the time or date fields. Enter a new numerical value. Leading zeros are not required. Adjust additional fields as required. To complete the command, press the **Esc** key. The user can then accept or abandon the changes.

Time Server Method

The Reporter's clock can also be set precisely by a time server at any moment the user desires. This can be useful when the Reporter becomes operational for the first time. This feature requires that the Reporter have network access to at least one time server. To use this method, press the **F1** function key. Alternatively, the **Ctrl+W** keys can be pressed simultaneously. The clock will be set immediately. A failure or confirmation message will be displayed. The latter will include the new date and time.

Using this method, the Reporter attempts to communicate with the time server(s) identified by the SNTP Server Primary and Secondary address fields. Refer to the section entitled "SNTP Server - Primary and Secondary" on page 30 for additional details. This method is also employed automatically once per day to sync the Reporter's real-time clock. At 00:05:00 (i.e., 5 minutes past midnight) the Reporter will request a time setting from either the primary or secondary time server.

Time sync activity, either manually or automatically invoked, creates entries in the Log. Typical entries are listed in the sample data entitled "Print Log Command" on page 42 or additional details.

Print Setup Data (P)

After the site-specific information is entered, the user may wish to review the various parameters that comprise the new Setup Database. To do so, select the Setup command from the Main Menu followed by the Print Setup Data sub-command. The following menu of sub-commands will be displayed.

```
Print Setup Data

P Print All
I Print Input Names
D Print Detect Times
V Print Virtual Inputs
N Print Network Settings
H Print HTTP Server Settings
L Print Alarm Parameters
F Print Site Specific Information
S Print System Parameters
```

Print Setup Data Command

The Print All command can be used at the end of the Setup Procedure to display the entire Setup Database. The remaining commands are used to display specific portions of the Setup Database.

The Print All command will issue a lengthy stream of data that will exceed the viewing capacity of a single terminal screen. The user may wish to temporarily pause the data for better viewing. Refer to the procedure entitled "Data Flow Control" on page 15.

TRANSFER FILES (T)

Careful thought and time is expended creating and entering the site-specific information that becomes a part of the Setup Database. In the event of an accidental loss of data memory (e.g., a reset performed by mistake) this information will need to be re-entered. The Transfer Files command provides the user with a quick and simple data exchange alternative to re-entering the Setup Database by hand.

The Download Setup Data sub-command is used to transmit the Setup Database to a data storage system. A PC running a communications program like HyperTerminal or Tera Term makes an ideal storage system. A file containing the setup parameters can be permanently saved on the hard disk or a flash drive for later retrieval via the Upload Setup Data sub-command.

To initiate a download or upload of the Setup Database, execute the Transfer Files command from the Main Menu. The following sub-commands will be displayed. Both procedures are described in the two sections that follow.

```
File Transfer

D Download Setup Data CAR to PC
U Upload Setup Data PC to CAR
F Firmware Upload
```

Transfer Files Command

DOWNLOAD SETUP DATA (D) - SAVING THE DATABASE

Perform the following steps to save the current Setup Database.

The steps necessary to complete the download depend upon which communications application is being used. The following example describes the HyperTerminal method. HyperTerminal 7.0 was used in the following procedure. Other versions of this program may be slightly different. However, the fundamental approach will remain valid.

1. Select the Download Setup Data sub-command. The following message will be displayed.

```
Start text file capture on your PC and hit any key
```

2. With the mouse, click on the Transfer>Capture Text... command. The Capture Text dialog box will be displayed.
3. Click the button labeled Browse... to open the Select Capture File dialog box.
4. Navigate to the desired folder where the Setup Database file will be saved. In the edit box labeled "File name:", enter an appropriate name for the new file.

As the saved Setup Database file will be a text file, it will be assigned a file extension of ".txt".

5. Click the button labeled "Save". The Select Capture File dialog box will close. The user will be returned to the Capture Text dialog box.
6. Click the button labeled "Start". Press the **Enter** key to initiate the transfer. Data similar to the following will be displayed. The sample data lists only the first and last four lines of text. The data transfer will cease automatically after a few seconds.

```
:100000000008DC123456C0A80064FFFFFF000000A7
:10001000000088130105433134736561723 22E7616
:100020003130300000000000000000000000000003F
:100030000000000000000000000000000000000000C0


:1004D000726C696E6B2E757072722E636F6D000098
:0C04E00000000000000000000000FF11
:00000001FF
Stop file capture and press ESC to continue
```

Sample Data from Upload Command

7. Click the Transfer>Capture Text>Stop command to complete the transfer. Press the **Esc** key twice to return to the Main Menu.

Upload Setup Data (U) - Restoring the Database

Before the Setup Database can be restored to the Reporter it must have been previously saved. Refer to the procedure entitled "Download Setup Data (D) - Saving the Database" on page 19. Perform the following steps to restore a saved Setup Database.

The steps necessary to complete the upload depend upon which communications application is being used. The following example describes the HyperTerminal method. HyperTerminal 7.0 was used in the following procedure. Other versions of this program may be slightly different. However, the fundamental approach will remain valid.

1. Select the Upload Setup Data sub-command. The following message will be displayed.

```
Are you SURE you want to upload new Setup Data from PC to CAR?
No Yes
```

2. Select No to abort the upload. Select Yes to proceed. If the user elects to proceed with the upload the following message will be displayed.

```
Send hex setup file as text file now
```

A hex file is a particular type of text file. Provided the saved Setup Database file was not renamed, it will have a file extension of ".txt".

3. With the mouse, click on the Transfer>Send Text File... command. The Send Text File dialog box will open.
4. Navigate to the desired folder where the Setup Database file was saved. Select the appropriate file.
5. Click the button labeled "Open". The Send Text File dialog box will close.
6. Several period characters will be displayed. They are used to indicate the progress of the transfer. The data transfer will cease automatically after a few seconds. The following message will be displayed.

```
....
Upload completed
Press ESC to continue
```

7. Press the **Esc** key twice to return to the Main Menu.

Log Off (X)

The Log Off command is used to terminate the current user session. If the previous user logs off of the Reporter, access can be regained only by entering the correct password. If the previous user fails to log off, a second user will be allowed access without entering a correct password.

All sessions should be terminated by executing the Log Off command.

To log off of the Reporter, access the Main Menu and then press the **X** key. The following message will be displayed.

```
About to Log Off, are you sure?
No Yes
```

Log Off Command

If the user proceeds with the log off the current session will be immediately terminated.

This completes the site-specific portion of the Setup Procedure. Since the installation and setup of the Reporter are critical to how the CAR-14 will perform, it is advisable to review the steps taken earlier. Make any changes that may be required.

Maintainer Mode must now be terminated. If the Maintainer Mode LED is illuminated, press the Maintainer Mode PB switch for .5 seconds.

The CAR-14 is ready to operate in accordance with its installed Setup Database. It is assumed that the Raven X, network and message processing server are also properly configured.

The remainder of this chapter provides additional information that concerns users with Administrative Access. It can be ignored by users with Restricted Access. The next chapter describes how to operate the CAR-14.

SETUP PROCEDURE - ALL SETUP DATA

The Setup Procedure described in this section will typically be used by signal engineers who need to prepare a new, or perhaps make significant changes to an existing, Setup Database. Accordingly, an Administrative Password must be entered to access the Reporter. It is assumed that the user has already logged onto the Reporter. The Main Menu should be displayed. Refer to the sample data entitled "Main Menu" on page 13.

Unless otherwise stated, it is assumed that the Union Pacific-defined c14sear2.v100 Setup Database has been installed in the CAR-14. The comm port of the PC must be set to operate at a speed of 9600 Baud.

Before proceeding with the Setup Procedure, verify that the front panel LED labeled "Maintainer Mode" is illuminated. If it is not, press the switch labeled"Maintainer Mode PB" for .5 seconds. The Maintainer Mode LED should now be illuminated confirming that the CAR-14 is operating in Maintainer Mode. This will prevent any Alarms from being sent while the Reporter is being set up.

PARAMETERS PREVIOUSLY DESCRIBED

The Administrative Password provides the user with unrestricted access to the Setup Database. This includes all of the parameters described in the section entitled "Setup Procedure - Site Specific Data Only" on page 15. Refer to the following sections for a description of:

- "Site Specific Information (F)" on page 15.
- "Time / Date (C)" on page 17.
- "Print Setup Data (P)" on page 18.
- "Transfer Files (T)" on page 19.
- "Log Off (X)" on page 20.

The remaining parameters included in the Setup Database are a part of the Setup command. The Setup command is listed in the Main Menu.

Setup (S)

The following menu of sub-commands will be displayed after executing the Setup command.

```
Setup Menu

I Input Names
D Detect Times
V Virtual Inputs
N Network
S System Parameters
P Print Setup Data
R Reset Setup
H HTTP Server
L Alarm Configuration
```

Setup Commands

In the sections that follow, eight of the Setup Menu commands are described. The commands are listed in a sequence that will likely be used if the Setup Database must be changed in its entirety.

Reset Setup (R)

The Reset Setup command can be used at any time to restore the Reporter to its factory default settings. The following message will be displayed after executing the Reset Setup command.

```
RESET ALL SETUP DATA TO FACTORY DEFAULTS, ARE YOU SURE?
No Yes
```

Reset Setup Command

Select No to abort the reset. Select Yes to proceed.

The Reset Setup command will return the Terminal Port Baud rate to its default setting of 38,400 Baud. The PC Baud rate may have to be adjusted.

The time and date settings, along with the Network and several System Parameters, are not affected by the Reset Setup command. Table 4 lists the values after the reset is performed. The table also lists the values associated with the c14sear2.v100 Setup Database defined by Union Pacific.

Parameter	Value After Reset	c14sear2.v100 Value
State	(not assigned)	XX
Subdivision	(not assigned	0000
DOT Number	(not assigned)	TESTXXX
Time Zone	(as previously assigned)	CST (UTC-6)
Daylight Saving Time	(as previously assigned)	Enabled
DNS Name	(not assigned)	m402555TEST.airlink.uprr.com
Analog Configuration-Low Limit	0.0 Vdc	10.4, 11.2, 0.0, 0.0 Vdc
Analog Configuration-High Limit	51.1 Vdc	15.6, 16.8, 20.0, 20.0 Vdc
Time / Date	(as previously assigned)	(as previously assigned)
Input Names-Digital Inputs	DInput01, 02, 03...	(see sample data on page 26)
Input Names-Analog Inputs	AInput01, 02, 03...	(see sample data on page 26)
Input Names-Virtual Inputs	VInput01, 02, 03...	(see sample data on page 26)
Digital Inputs-Detect Time	0.300 seconds	1.000 seconds
Virtual Inputs-Variables	--- (not assigned)	--- (not assigned)
Network-IP Address	(as previously assigned)	192.168.0.100

Table 4: Setup Database Settings

Parameter	Value After Reset	c14sear2.v100 Value
Network-Subnet Mask	(as previously assigned)	255.255.255.0
Network-Gateway	(as previously assigned)	0.0.0.0
Network-Ethernet MAC Address	(as previously assigned)	(as previously assigned)
Network-Port	(as previously assigned)	5000
Network-TCP/IP mode	(as previously assigned)	Telnet
Network-DHCP mode	Static IP	Automatic IP
Network-SNTP Server (primary)	(not assigned)	e.ntp.uprr.com
Network-SNTP Server (secondary)	(not assigned)	f.ntp.uprr.com
Network-DHCP IP Address	(not assigned)	0.0.0.0
Network-DHCP Subnet Mask	(not assigned)	0.0.0.0
Network-DHCP Gateway	(not assigned)	0.0.0.0
Network-DHCP DNS (primary)	(not assigned)	0.0.0.0
Network-DHCP DNS (secondary)	(not assigned)	0.0.0.0
Description	***** NOT SET *****	C14sear2.v100
Terminal Port Baud Rate	38,400	9600
Terminal Port Mode	Terminal	Terminal
Administrative Password	PASSWORD	
Restricted Password	LOOKWORD	car
High Temp Limit	257°F	140°F
Low Temp Limit	-67°F	-40°F
Maint Timeout	5400 seconds	5400 seconds
Health Check Interval	48 hours	48 hours
Equipment ID	(not assigned)	C14
HTTP-Server URL	(not assigned)	www.up.com
HTTP-Server Script File	(not assigned)	/xml_services/signal_equipment/ PAAMsgProcess.cfm
Alarm Configuration-SetInp	--- (not assigned)	(see sample data on page 32)
Alarm Configuration-SetState	Off	(see sample data on page 32)
Alarm Configuration-SetTime	0	(see sample data on page 32)
Alarm Configuration-SetName	(not assigned)	(see sample data on page 32)
Alarm Configuration-ClrInp	--- (not assigned)	(see sample data on page 32)
Alarm Configuration-ClrState	Off	(see sample data on page 32)
Alarm Configuration-ClrTime	0	(see sample data on page 32)
Alarm Configuration-ClrName	(not assigned)	(see sample data on page 32)
Alarm Configuration-MaintClr	No	(see sample data on page 32)

Table 4: Setup Database Settings

SYSTEM PARAMETERS (S)

System Parameters are those parameters that affect the Reporter as a whole. They do not affect individual inputs or their behavior. System Parameters include, but are not limited to, the Description, passwords and Equipment ID settings. The nine System Parameters are defined with a single command containing multiple fields. A typical response to the System Parameters command is shown in the following. The use of each System Parameter is described in the following sections.

```
                                System Parameters
                                -----------------
                  Description
C14sear2.v100
                  Terminal Port Baud Rate   9600
                  Terminal Port Mode      Terminal
                  Administrative Password
                  Restricted Password     car
                  High Temp Limit         140 Degrees F
                  Low Temp Limit          -40 Degrees F
                  Maint Timeout            5400 Sec
                  Health Check Interval    48 Hours
                  Equipment ID            C14
```

System Parameters Command

Description

The Description setting is used to identify the Setup Database that was downloaded from the Union Pacific website. It is included as a line of text just prior to the password challenge. It is also part of the Main Menu heading. Refer to the sample data entitled "Main Menu" on page 13. A total of eighty alphanumeric characters can be used to define the Description. It is assigned using the standard Edit Field techniques described in "Working with Fields" on page 14.

The Description parameter is not unique among CAR-14 units. It is likely that many Reporters in a region will share a common Description.

Terminal Port Baud Rate

The Terminal Port Baud rate may be assigned one of ten values. Valid settings are: 300, 600, 1200, 2400, 4800, 9600, 19200, 38400, 57600 and 115200 bps. Press the **Spacebar** to select a Baud rate.

The following message will be displayed if the Baud rate was changed.

```
Change baud rate now, then
 Press any key to continue
```

The user must change the Baud rate of the PC to match the new setting assigned to the CAR-14.

Terminal Port Mode

The Terminal Port of the CAR-14 is generally used to provide a PC-based user interface. However, it can also be used in Remote Port Mode to provide access to another device that is co-located at the signal site. In this case, the Terminal Port is connected to the alternate device using an appropriate cable. This allows a remote user to dialog with the alternate device via a Telnet connection. The details of this feature are described in the section entitled "Remote Port (R)" on page 37.

After highlighting the field, press the **Spacebar** once to immediately place the Terminal Port in Remote Port Mode. As the action is immediate, no confirmation will be issued. The Terminal Port will no longer be available to the user. It must then be physically connected to the alternate device.

Once the Terminal Port is switched to Remote Port Mode, it is no longer available to a local user. To restore the port to Terminal Port Mode, the on-site user must press the front panel switch labeled "Maintainer Mode PB" for 10 seconds without interruption. The PC can then be reconnected to the port. The normal password challenge will be displayed.

Administrative and Restricted Passwords

Access to the CAR-14 via any port is protected by a dual level password system. Administrative Access permits unrestricted access to all Reporter functions. Administrative Access allows the entire Setup Database to be altered. Accordingly, the Administrative Password should be known to a limited number of users with a genuine need to know.

Restricted Access permits only limited access to the Reporter. It allows the user to review the entire Setup Database, but alter only a limited portion of the database. The Restricted Password can be shared with maintainers and technicians that are involved in the installation and setup of a CAR-14.

The Administrative and Restricted Passwords are defined similarly. Each may be assigned any combination of alphanumeric characters not exceeding eight total.

Care should be exercised in assigning and saving the Administrative Password. If it is lost or forgotten it will be necessary to contact MICRO-AIDE for assistance.

HIGH AND LOW TEMP LIMITS

The temperature inside the CAR-14 is measured. The High and Low Temp Limits are used to define the range of acceptable operation. Settings can range from 257°F to -67°F.

If the temperature reaches an extreme value, either high or low, a Log entry is created. Temperature-related Log entries are shown in the sample data entitled "Print Log Command" on page 42.

MAINT TIMEOUT

Maintainer Mode allows a maintainer or technician to test the crossing system without concern that unwanted Alarms will be transmitted by the CAR-14. Refer to the section entitled "Control of Maintainer Mode" on page 36 for additional details. Maintainer Mode is enabled or disabled by simply pressing the front panel switch labeled "Maintainer Mode PB" for .5 seconds. However, in the event that the maintainer forgets to disable Maintainer Mode the Maintainer Timeout parameter will restore the CAR-14 to normal operation.

To change the setting, enter a new numeric value in the range of 0 to 99,999 seconds. Normal operation of the Reporter is restored immediately after the timeout has expired.

A Maintainer Timeout value of 0 disables the timer. This allows the CAR-14 to remain in Maintainer Mode with the transmission of Alarms suspended indefinitely. This can be useful if the crossing will be tested for more than 24 hours. However, in this special case the maintainer must remember to re-enable normal mode operation. This setting must be used with caution.

HEALTH CHECK INTERVAL

It's quite likely that the Reporter will not issue any Alarm messages for an extended period of time. This will be the case when no failures are detected and consequently no Alarms are sent to the message processing server. However, the message processing server needs to know if the Reporter is still in service or has itself experienced a failure. A network outage represents a similar concern. The Health Check message is sent periodically to the server as a means of verifying overall system availability.

To change the setting, enter a new numeric value in the range of 0 to 255 hours. The setting defines the maximum time between messages sent by the CAR-14. If the time measured from the last message sent to the current time exceeds the assigned interval, a Health Check message is immediately sent.

A Health Check Interval value of 0 disables the issuance of Health Check messages. This setting must be used with caution.

An entry is made to the Log each time a Health Check message is sent. A typical entry is shown in the sample data entitled "Print Log Command" on page 42.

EQUIPMENT ID

The Equipment ID can be any three-character designation that identifies the CAR device (e.g., C14 or C24). The user may wish to consult Union Pacific as regards preferred codes.

Input Names (I)

The CAR-14 utilizes two types of inputs. The ten Digital and four Analog Inputs are referred to as physical inputs because actual circuits are wired to the Reporter's input connectors. The CAR-14 also includes eight Virtual Inputs. Virtual Inputs are defined by the user for the purpose of detecting logical states among the physical inputs. Refer to the section entitled "Virtual Inputs (V)" on page 27.

All inputs, regardless of type, share one common programming characteristic. The user can define a unique Input Name to each input. The Input Name can be any combination of alphanumeric characters not exceeding eight total. Input Names appear in two places. They are used to identify inputs in the Live Status report. The section entitled "Live Status (L)" on page 40 lists a typical report. Input Names are also used when defining Virtual Inputs.

The first 20 Input Names defined by the c14sear2.v100 Setup Database are listed in the following.

```
                    Input Names
                   Input   Name
                   ----- --------
                    D01  XR
                    D02  D2
                    D03  AnaFail
                    D04  HiTemp
                    D05  GateProb
                    D06  D6
                    D07  D7
                    D08  D8
                    D09  D9
                    D10  POR
                    A01  B1
                    A02  B2
                    A03  B3
                    A04  B4
                    V01  V1
                    V02  V2
                    V03  V3
                    V04  V4
                    V05  V5
                    V06  V6
[F1/^W]=Next Page [F2/^E]=Prev Page
```

Input Names Command

Two data screens are required to list all 22 physical and Virtual Inputs. To advance to the next screen press the **F1** function key. To return to the previous screen press the **F2** function key. Alternatively, the **Ctrl+W** and **Ctrl+E** keys can be pressed simultaneously, respectively.

Detect Times (D)

The Digital Inputs of the CAR-14 will generally be connected to relay-based control circuits. Since relay contacts typically bounce, the Reporter must have the ability to de-bounce these inputs. The Detection Time feature allows the user to establish a validation time for each Digital Input.

A typical response to the Detect Times command is shown in the following.

```
                    Detect Times

                  Input Detect Time
                  ----- -----------
                   D01     1.000
                   D02     1.000
                   D03     1.000
                   D04     1.000
                   D05     1.000
                   D06     1.000
                   D07     1.000
                   D08     1.000
                   D09     1.000
                   D10     1.000
```

Detect Times Command

The sample data shown previously is from the c14sear2.v100 Setup Database. The range of valid Detection Times is 0 to 32.767 seconds. Use the decimal point key to enter fractional values.

Set the Detection Times to values slightly greater than the longest expected bounce time of the relay contacts. This will insure that transient voltages are not reported and that legitimate short duration transitions will be properly detected. To disable a Digital Input, set its Detection Time value to zero.

VIRTUAL INPUTS (V)

Virtual Inputs are a unique feature only found in MICRO-AIDE's family of signal monitoring products. These products are frequently used to gather data on a failure condition thought to exist in a relay-based control circuit. On occasion, the suspected failure can be defined as the abnormal occurrence of two or more relay states. The normal operation of the circuit predicts that only certain relay states can occur. It follows that any deviation from these normal states suggests a potential failure that should be flagged and carefully examined.

Identifying failures that occur as the result of abnormal relay states is greatly simplified by using the Virtual Input feature. In the case of a CAR device, Virtual Inputs have the added capability of generating and clearing Alarm states. This means that logical conditions among two or more inputs can be used to define very specific Alarm messages. For additional details refer to the section entitled "Alarm Configuration (L)" on page 32. The CAR-14 allows as many as eight Virtual Inputs to be defined. They are characterized by two essential properties.

The first property concerns the selection of variables. Variables are merely the inputs (physical or virtual) that will be checked to determine if a specific logical condition is valid. The number of variables that define the Virtual Input can range from one to four. Variables can be Digital, Analog and other Virtual Inputs. Assigning a Virtual Input as a variable to another Virtual Input is referred to as nesting. Nesting allows the user to create a higher level Virtual Input that evaluates more than four variables.

The second property pertains to the state of each assigned variable. A fault condition in a relay-based circuit can only be identified if the state of each variable is properly evaluated. The state of a variable is defined by the CAR-14 as either On or Off. Both states are described in the following.

On–The Digital Input voltage is in the range from 9 to 36 Vdc. The Analog Input level is outside the acceptable range as defined by the region between the Limit Values (refer to Figure 4 on page 17). The Virtual Input evaluates to a true logic state.

Off–The Digital Input voltage is less than 2 Vdc. The Analog Input level is within the acceptable range as defined by the region between the Limit Values. The Virtual Input evaluates to a false logic state.

The procedure used to define Virtual Inputs is described in the following two sections.

ASSIGNING VARIABLES

An array of fields similar to the following will be displayed after selecting the Virtual Inputs command. In the example cited, only variables for Virtual Input V8 have been entered. The other fields have retained their factory default settings.

```
Virtual Input Parameters
 Input  Function of:
 ----- --- --- --- ---
  V01  --- --- --- ---
  V02  --- --- --- ---
  V03  --- --- --- ---
  V04  --- --- --- ---
  V05  --- --- --- ---
  V06  --- --- --- ---
  V07  --- --- --- ---
  V08  D02 D06 A01 ---

[F1/^W] to edit virtual output function
```

Virtual Inputs Command

To assign variables perform the following steps in the order described.

1. Position the highlight anywhere in the row identified by the Virtual Input to be programmed (e.g., V8). Then move the highlight within the row to the extreme left-most column.
2. Assign the first variable by entering **Dn**, **An or Vn** where n is 1 through 10 for Digital Inputs, 1 through 4 for Analog Inputs and 1 through 8 for Virtual Inputs. Leading zeros are not required.
3. Move the highlight to the right. Assign the remaining variables using the previous step. Not all fields need to be assigned a variable. To remove a variable press the **0** key or simply delete all of the characters in the field.
4. Press the **F1** function key to proceed to the next step. Alternatively, the **Ctrl+W** keys can be pressed simultaneously.

A sample response listing three variables is shown in the following. To complete the definition of the Virtual Input the state of each variable must now be assigned.

```
                    Virtual Output Function
Inputs:                                          Output:
   D02       D06       A01       ---              V08
      D2        D6        B1                    TESTALRM
-------- -------- -------- --------            --------
     Off       Off       Off                       Off
      On       Off       Off                       Off
     Off        On       Off                       Off
      On        On       Off                       Off
     Off       Off        On                       Off
      On       Off        On                        On
     Off        On        On                       Off
      On        On        On                       Off
```

Assigning States to Virtual Inputs

3

Selecting States

Before proceeding further the table of state selection fields must be understood. Each Virtual Input will have its own data table. However, the basic structure of each table will remain the same. Refer to the sample data entitled "Assigning States to Virtual Inputs". Each row lists, from left to right, the Input Numbers that are assigned to each variable (e.g., labeled "D02", "D06" and "A01"). Unassigned variables are labeled "---". The last column of the third line lists the Input Number of the Virtual Input being defined (e.g., labeled "V08"). Directly below the Input Numbers on the fourth line of text is listed the Input Name for the variable. For the sample data shown the Input Names are labeled "D2", "D6" and "B1". The Virtual Input has been assigned an Input Name of "TESTALRM".

The remaining lines of text will vary with the number of assigned variables. One variable will list two lines of text. Two variables will list four lines of text. Three variables will list eight lines of text. Four variables will list sixteen lines of text. Each line will specify a state for each of the assigned variables (i.e., inputs). Each state is identified as either On or Off. The sample data includes three variables, so eight lines of text lists all of the possible variable states.

The last column of data in each line includes a selection field. The field can be set, line by line, to an On or Off state. The user decides which state to assign to the Virtual Input for each combination of variable states. For the sample data shown, the Virtual Input is assigned to an On state when the variable states are On, Off and On. Any time this combination of states is found to exist among inputs D2, D6 and A1, respectively, Virtual Input V8 will be evaluated as true and then assume an On state. When this logical condition no longer exists, Virtual Input V8 will assume an Off state.

Perform the following steps to complete the Virtual Input programming procedure.

1. Move the highlight to the first line of text that lists the input states.
2. Press the **Spacebar** to select the appropriate On / Off state for that combination of inputs.
3. Move the highlight to the next line and repeat the preceding step.

4. When the Virtual Input state is correctly defined for each line, press the **Esc** key and return to the variable assignment table.

5. Press the **Esc** key to exit the command or reposition the highlight and select the next Virtual Input. Repeat both of the previously described procedures as required.

NETWORK (N)

The Network command is used primarily to configure the Ethernet Port. A collection of user-assigned fields will be displayed after the command is selected. The following data sample lists settings assigned by the c14sear2.v100 Setup Database.

```
                                Network Setup
                                -------------
                IP Address              192.168.  0.100
                Subnet Mask             255.255.255.  0
                Gateway                   0.  0.  0.  0
                Ethernet MAC Address    00-08-DC-01-23-45
                Port                              5000
                TCP/IP mode             Telnet
                DHCP mode               Automatic IP
                SNTP Server (primary)
e.ntp.uprr.com
                SNTP Server (secondary)
f.ntp.uprr.com
                DHCP IP Address         0.0.0.0
                DHCP Subnet Mask        0.0.0.0
                DHCP Gateway            0.0.0.0
                DHCP DNS (primary)      0.0.0.0
                DHCP DNS (secondary)    0.0.0.0
```

Network Command - c14sear2.v100 Settings

A description of each field follows.

IP ADDRESS

The IP Address has significance only when the DHCP Mode is set to Static IP. In this case, the IP Address becomes the fixed address of the Reporter's Ethernet Port. Ignore the setting when the DHCP Mode is set to Automatic IP.

SUBNET MASK

The Subnet Mask has significance only when the DHCP Mode is set to Static IP. In this case, the Subnet Mask must be set in accordance with the requirements of the LAN. A setting of 255.255.255.0 will generally prove to be acceptable. Ignore the setting when the DHCP Mode is set to Automatic IP.

GATEWAY

The Gateway Address has significance only when the DHCP Mode is set to Static IP. In this case, the Gateway Address must be set in accordance with the requirements of the LAN. If a gateway device is not used, a setting of 0.0.0.0 will generally prove to be acceptable. Ignore the setting when the DHCP Mode is set to Automatic IP.

ETHERNET MAC ADDRESS

The first three numbers that comprise the MAC Address must be 00-08-DC. They must not be changed as they are uniquely associated with the Ethernet module used by the CAR-14. The remaining three numbers must not be shared by any other Ethernet device on the network. The initial setting is 00-08-DC-aa-bb-cc, where aa-bb-cc is the serial number assigned by MICRO-AIDE to the Reporter. By way of example, a CAR-14 with a serial number of 12345 will have a factory assigned MAC Address of 00-08-DC-01-23-45. This address is guaranteed to be unique.

The MAC Address is not saved as part of the Setup Database. Accordingly, restoring a previously saved Setup Database will not alter the current MAC Address setting. It can only be changed by direct user intervention.

Use extreme caution in modifying the Reporter's MAC Address. Serious network conflicts will be created if duplicate MAC Addresses are allowed to exist.

Port

The Port setting identifies the port that will be used for remote access to the Reporter. A remote HyperTerminal or Tera Term user can access the CAR-14 user interface just like a local user. The former will launch a Telnet connection. The latter will use a serial comm connection. VPN users must access the Reporter via the Raven X by selecting the modem's DNS name along with the assigned Port number. The DNS Name is described in the section entitled "DNS Name" on page 16.

If a Telnet connection is idle for more than 5 minutes a timeout condition will occur. The timeout will result in a forced disconnection at the CAR-14 end. The user will then have to initiate a new connection procedure to re-establish communications with the Reporter. The forced disconnection is performed so that in the event of a connection failure anywhere in the network the Reporter will be prepared to complete a subsequent connection attempt. However, to be successful the subsequent connection attempt must occur no sooner than 5 minutes after the communications disruption. The Reporter will automatically recover from communication failures of less than 5 minutes duration provided the user end does not perform a disconnect.

TCP / IP Mode

Press the **Spacebar** to select either the Raw TCP / IP or Telnet setting. Either setting can be used by a Telnet user. This setting is retained for compatibility and consistency with the CAR-24.

DHCP Mode

Press the **Spacebar** to select either the Automatic IP or Static IP setting. The Union Pacific c14sear2.v100 Setup Database uses the automatic setting. It must be used in all cases where a DHCP server will be used to establish the correct network settings of the Reporter's Ethernet Port.

Use the Static IP setting in those cases where only fixed addresses will be used by the CAR-14.

SNTP Server - Primary and Secondary

The real-time clock used by the CAR-14 has a rated accuracy of ±3 ppm (±8 seconds per month). Nevertheless, if left uncorrected the Reporter's clock will drift an appreciable amount over time. To counter this potential problem, the CAR-14 employs the SNTP-Unicast method to synchronize the Reporter's real-time clock.

The SNTP Server Primary and Secondary settings are used to identify the first choice and alternate choice time servers, respectively. Both fields will accept a URL designation or IP Address. The secondary setting can be left blank if an alternate time server is not available. The Time / Date command includes a method that allows the user to immediately synchronize the real-time clock from an available time server. This method is described in the section entitled "Time Server Method" on page 18. The time server(s) accessed by this method are defined by the SNTP Server field(s).

The SNTP-Unicast method is employed automatically once per day to sync the Reporter's real-time clock. At 00:05:00 (i.e., 5 minutes past midnight) the Reporter will request a time setting from either the primary or secondary time server.

Time sync activity, either manually or automatically invoked, creates entries in the Log. Typical entries are listed in the sample data entitled "Print Log Command" on page 42 or additional details.

ADDITIONAL DHCP-RELATED SETTINGS

Provided the Reporter is operating in Automatic IP mode, the Network command will provide some additional Internet address information. In this case, the Network command will list five additional address fields at the bottom of its display. Refer to the sample data entitled "Network Command-c14sear2.v100 Settings" on page 29.

Initially the addresses will all be listed as 0.0.0.0. However, once the Reporter receives its response from a DHCP server, the fields will be filled appropriately. This address data listed is strictly informational in nature. It cannot be altered by the user.

Press the **Esc** key after all of the fields are properly defined. The following message will be displayed if the MAC Address was altered.

```
CHANGE MAC ADDRESS (normally 00-08-DC-xx-xx-xx), are you SURE?
No Yes
```

Select Yes to proceed. Finally, the following message will confirm the change(s) to be made to any other Network-related settings.

```
Network settings changed, restart network now?
No Yes
```

HTTP SERVER (H)

The HTTP Server command is used to identify the Union Pacific message processing server. Data similar to the following will be displayed after executing the command.

```
                    HTTP Server Setup
                    -----------------
Server URL:
www.up.com

Server Script File:
/xml_services/signal_equipment/PAAMsgProcess.cfm
```

HTTP Server Command

The command provides for the setting of two important fields. Both are described in the following sections.

SERVER URL

The HTTP Server field must be set to the URL or IP Address of the Union Pacific message processing server. The setting can contain a maximum of 80 alphanumeric characters. The Union Pacific c14sear2.v100 Setup Database includes a setting of www.up.com.

The Server URL setting of www.up.com should only be changed with the concurrence of Union Pacific. Alarm messages will not be properly delivered if the message processing server is misidentified.

SERVER SCRIPT FILE

The CAR-14 uses the HTTP-Get method for transmitting Alarm message content. Alarm messages are handled by a script file that runs on the message processing server. The appropriate script file must be known to the Reporter. The Server Script File field is used to identify the script. The c14sear2.v100 Setup Database includes a setting of /xml_services/signal_equipment/PAAMsgProcess.cfm.

The Server Script File setting of /xml_services/signal_equipment/PAAMsgProcess.cfm should only be changed with the concurrence of Union Pacific. Alarm messages will not be properly delivered if the script is misidentified.

Alarm Configuration (L)

The Alarm Configuration command is used to display the Alarm Configuration Table (ACT). The ACT allows the user to establish criteria for 20 separate Alarms. The ACT is organized as 20 rows. Each row includes ten fields, nine of which can be edited. Each field includes a numeric or alphanumeric setting that is used to define the Alarm.

At the present time, the c14sear2.v100 Setup Database defines only ten Alarms. Appendix B provides a detailed explanation of the ACT used by the c14sear2.v100 Setup Database.

The following data sample displays the ACT established by the c14sear2.v100 Setup Database.

Alarm Configuration

	SetInp	SetState	SetTime	SetName	ClrInp	ClrState	ClrTime	ClrName	MaintClr
L01	A01	On	600	B1	A01	Off	300	1B	No
L02	A02	On	600	B2	A02	Off	300	2B	No
L03	A03	On	600	B3	A03	Off	300	3B	No
L04	A04	On	600	B4	A04	Off	300	4B	No
L05	D10	Off	1800	IP	D10	On	300	PR	No
L06	D10	Off	7200	PK	D10	On	300	PR	No
L07	D03	On	5	AF	D03	Off	5	AR	No
L08	D04	On	5	TP	D04	Off	5	TN	No
L09	D05	On	5	GT	D05	Off	5	GC	No
L10	D01	Off	1800	LA	D01	On	10	CL	Yes
L11	---	Off	0		---	Off	0		No
L12	---	Off	0		---	Off	0		No
L13	---	Off	0		---	Off	0		No
L14	---	Off	0		---	Off	0		No
L15	---	Off	0		---	Off	0		No
L16	---	Off	0		---	Off	0		No
L17	---	Off	0		---	Off	0		No
L18	---	Off	0		---	Off	0		No
L19	---	Off	0		---	Off	0		No
L20	---	Off	0		---	Off	0		No

Alarm Configuration Command

Alarm messages are only issued when specific conditions are detected by the Reporter. Before attempting to modify an existing Alarm (or define a new Alarm) the processes used by the Reporter should first be fully understood. Irrespective of type, every Alarm is subject to the following conditions and processes.

- Alarms are identified by an Lnn designation, where nn is in the range from 01 to 20. The left-most column of the ACT lists the Alarm Number. It cannot be altered.
- Alarms are Set and Cleared by similar, but separate, processes. The parameters used by both processes are fully definable. When an Alarm is Set an appropriate message is sent to the server. When an Alarm is Cleared a related, but nevertheless distinct, message is also sent.
- An Alarm is defined by two primary conditions. Digital, Analog and Virtual Inputs are continuously evaluated as one primary condition. The other primary condition involves duration.
- The Input used to define the Alarm can be thought of as a trigger that is used to initiate a duration check. In this regard, the Input can be thought of as starting a stopwatch. If the elapsed time on the stopwatch exceeds a specified time, the conditions that define the Alarm are satisfied and an Alarm message is sent.
- The state of every Reporter Input is binary in nature. An input is either On or Off. Inputs can transition from Off to On or On to Off. Either transition can be selected as the trigger for the duration check.

The remaining nine fields of the ACT define the specific criteria for each Alarm. The settings for these fields are described in the following sections.

The content of the ACT should only be changed with the concurrence of Union Pacific. Alarms are defined by very specific criteria. Changing the criteria changes the meaning of an Alarm. Furthermore, Alarms can be defined that the script file will not be able to process. Proceed with caution.

SETINP

The SetInp parameter establishes the input criterion used to Set the Alarm. Its setting must be a valid Digital, Analog or Virtual Input. Entries must be in the form **Dn**, **An or Vn** where n is 1 through 10 for Digital Inputs, 1 through 4 for Analog Inputs and 1 through 8 for Virtual Inputs. Leading zeros are not required.

Although not necessary, in many cases the SetInp parameter will be the same input used to define the ClrInp parameter. In the case of the c14sear2.v100 Setup Database, the SetInp and ClrInp parameters are identical.

SETSTATE

The SetState parameter allows the On or Off state of the input to be used to Set the Alarm. Press the **Spacebar** key to select the required state. On and Off states are defined as follows:

On–The Digital Input voltage is in the range from 9 to 36 Vdc. The Analog Input level is outside the acceptable range as defined by the region between the Limit Values (refer to Figure 4 on page 17). The Virtual Input evaluates to a true logic state.

Off–The Digital Input voltage is less than 2 Vdc. The Analog Input level is within the acceptable range as defined by the region between the Limit Values. The Virtual Input evaluates to a false logic state.

SETTIME

The SetTime parameter establishes the duration criterion used to Set the Alarm. This feature prevents transient conditions from creating unwarranted Alarm messages. SetTime is always measured in seconds and must be in the range of 0 to 99,999. Fractional values are not accepted.

SETNAME

The SetName parameter is always a two-character mnemonic that serves as an identification for an Alarm that has been Set.

SetNames must be assigned with caution. The Union Pacific message processing server is programmed to only accept Alarm messages with valid SetName or ClrName parameters. Union Pacific must be consulted before creating a new SetName.

CLRINP

The ClrInp parameter establishes the input criterion used to Clear the Alarm. Its setting must be a valid Digital, Analog or Virtual Input. Entries must be in the form **Dn**, **An or Vn** where n is 1 through 10 for Digital Inputs, 1 through 4 for Analog Inputs and 1 through 8 for Virtual Inputs. Leading zeros are not required.

Although not necessary, in many cases the ClrInp parameter will be the same input used to define the SetInp parameter. In the case of the c14sear2.v100 Setup Database, the ClrInp and SetInp parameters are identical.

CLRSTATE

The ClrState parameter allows the On or Off state of the input to be used to Clear the Alarm. Press the **Spacebar** key to select the required state. On and Off states are defined as follows:

On–The Digital Input voltage is in the range from 9 to 36 Vdc. The Analog Input level is outside the acceptable range as defined by the region between the Limit Values (refer to Figure 4 on page 17). The Virtual Input evaluates to a true logic state.

Off–The Digital Input voltage is less than 2 Vdc. The Analog Input level is within the acceptable range as defined by the region between the Limit Values. The Virtual Input evaluates to a false logic state.

CLRTIME

The ClrTime parameter establishes the duration criterion used to Clear the Alarm. This feature prevents transient conditions from creating unwarranted Alarm messages. ClrTime is always measured in seconds and must be in the range of 0 to 99,999. Fractional values are not accepted.

ClrName

The ClrName parameter is always a two-character mnemonic that serves as an identification for an Alarm that has been Cleared.

ClrNames must be assigned with caution. The Union Pacific message processing server is programmed to only accept Alarm messages with valid SetName or ClrName parameters. Union Pacific must be consulted before creating a new ClrName.

MaintClr

The user can, at any time, place the Reporter in Maintainer Mode. Refer to the section entitled "Control of Maintainer Mode" on page 36 for additional details. While in Maintainer Mode the Reporter will not transmit Alarm messages to the server. The MaintClr setting can be used to reset an Alarm that is currently Set. The c14sear2.v100 Setup Database allows the LA Alarm (XR down for 30 minutes)to be reset by Maintainer Mode.

Press the **Spacebar** key to select a setting of either Yes or No.

Sample Alarm Definition

To further explain the ACT parameters previously described, the following Alarm definition is presented. The sample Alarm will be defined as follows:

- Alarm Number L20 will be defined.
- The Set Alarm will be referred to as NA. Its companion Cleared Alarm will be referred to as CA.
- The On state of Digital Input D9 will be used to Set the Alarm. The Off state of Digital Input D10 will be used to Clear the Alarm.
- Durations of 10 minutes and 5 minutes will be used to validate the NA and CA Alarms, respectively.
- Maintainer Mode will be allowed to Clear a pending NA Alarm.

The following sample data lists the Alarm parameters previously described. For the sake of brevity, Alarms L01 through L19 have not been listed.

```
                                Alarm Configuration
     SetInp SetState SetTime SetName ClrInp ClrState ClrTime ClrName MaintClr
     ------ -------- ------- ------- ------ -------- ------- ------- --------
        .      .        .       .       .      .        .       .       .
        .      .        .       .       .      .        .       .       .
        .      .        .       .       .      .        .       .       .
 L20   D09     On       600     NA     D10    Off       300     CA     Yes
```

Sample Alarm Definition

This completes the Setup Procedure. The installation and setup are critical to how the CAR-14 will perform. It is advisable to review the steps taken earlier. Make any changes that may be required.

Maintainer Mode must now be terminated. If the Maintainer Mode LED is illuminated, press the Maintainer Mode PB switch for .5 seconds.

The CAR-14 is ready to operate in accordance with its installed Setup Database. It is assumed that the Raven X, network and message processing server are also properly configured.

The next chapter describes how to operate the CAR-14.

Chapter 4 – Operation

Introduction

Except as noted in the following sections, the operation of the CAR-14 is completely automatic once an appropriate Setup Database is loaded and the unit is installed. The Reporter is designed to operate autonomously without any need for user intervention. It will monitor the crossing and transmit Alarm and Health Check messages as the need arises. Nevertheless, the user may on occasion wish to review the operation of the Reporter. The user's operational interaction with the Reporter is facilitated by several features. The features can be broadly grouped into three main categories.

Normal operation can only occur when the Reporter is not in Maintainer Mode. Maintainer Mode is enabled whenever the LED labeled "Maintainer Mode" is illuminated. The section entitled "Control of Maintainer Mode" on page 36 describes how Maintainer Mode is enabled and disabled.

Front Panel Features

The status of several important Reporter features are continuously updated by the use of LED indicators. Additionally, the Reporter can be placed in Maintainer Mode from the front panel. The LEDs and push-button switch are illustrated in Figure 2 on page 8.

Status Indicators

The front panel of the Reporter includes a group of five LEDs aligned vertically along the left side of the unit. Each are described in the following.

Power–The green LED illuminates when power is applied. Power must be in the range of 9 to 36 Vdc.

Active Alarm–The red LED illuminates whenever one or more Alarms are active. As an example, if a battery voltage is found to be insufficient for a defined duration, an Alarm will be Set. The Active Alarm LED will illuminate while the Alarm is Set and turn off only after all Alarms are Cleared. Alarm Set and Clear definitions are described in the section entitled "Alarm Configuration (L)" on page 32.

Message Sent–The green LED will illuminate for 5 seconds when an Alarm is transmitted to the alarm processing server. The LED will flash for all types of Alarm messages (i.e., Set, Clear and Health Check).

Terminal–The green LED will flash momentarily while data is being sent or received via the serial Terminal Port. The Terminal Port will be active when a user is logged on to the Reporter via the port or when the port is operating in Remote Port Mode. Refer to the section entitled "Remote Port (R)" on page 37 for additional details.

Maintainer Mode–The yellow LED will illuminate while the Reporter is operating in Maintainer Mode. Refer to the section entitled "Control of Maintainer Mode" on page 36 for additional details.

Digital Input Indicators

Each of the ten Digital Inputs are linked to an individual LED indicator. A green LED will illuminate when its associated Digital Input is in an On state. Digital Inputs assume an On state when their voltage is in the range of 9 to 36 Vdc and the voltage persists in this range for a duration greater than the input's assigned Detection Time. Refer to the section entitled "Detect Times (D)" on page 26 for additional details.

Maintainer Mode Pushbutton

Control of Maintainer Mode

On occasion the crossing will need to be tested or perhaps repaired. While under test or repair, it is likely that the CAR14 will transmit Alarm messages that do not reflect failures of any crossing equipment. Placing the Reporter in Maintainer Mode indefinitely halts the transmission of Alarm messages.

To place the Reporter in Maintainer Mode, press the switch labeled "Maintainer Mode PB" for .5seconds. The yellow LED labeled "Maintainer Mode" will illuminate to confirm the action. The transmission of Set, Clear and Health Check messages will be halted immediately.

The Reporter's normal mode of operation can be restored by either of two actions. They are described in the following.

- Press the Maintainer Mode PB switch for .5seconds.
- If left unattended, a fail safe mechanism will automatically restore normal operation. The Maint Timeout setting controls the duration of Maintainer Mode. If the duration is exceeded, normal operation is restored immediately. The action will be confirmed by the Maintainer Mode LED. This timeout feature is fully described in the section entitled "Maint Timeout" on page 25. The c14sear2.v100 Setup Database includes a Maintainer Mode timeout value of 90minutes.

An entry is made to the Log whenever the status of Maintainer Mode is changed. A typical entry is shown in the sample data entitled "Print Log Command" on page 42.

Control of Remote Port Mode

The Maintainer Mode PB switch includes a secondary action. It can be used to enable and disable Remote Port Mode. Refer to the section entitled "Remote Port (R)" on page 37 for additional details. If a remote user forgets to disable Remote Port Mode the Terminal Port will be unavailable to a local PC user. This condition will continue indefinitely if no further action is taken. The secondary action of the Maintainer Mode PB switch provides a means by which this potential problem can be avoided.

To enable or disable Remote Port Mode, press the Maintainer Mode PB switch for 10seconds without interruption. This action will toggle the status from enabled to disabled or disabled to enabled.

If the Maintainer Mode PB switch is pressed for fewer than 10seconds, Maintainer Mode will instead be enabled and the status of Remote Port Mode will be unaffected. The proper action will be confirmed by the Maintainer Mode LED remaining off.

Connecting Remotely

The previous chapters described accessing the user interface of the CAR-14 via its serial Terminal Port. The Reporter is equipped with an Ethernet Port. Its design provides a variety of network-based features. Among these features is the ability to remotely access the Reporter via an Ethernet connection. To utilize this feature a remote user simply needs to launch a Telnet session directed to the IP Address and Port assigned to the Reporter. The section entitled "Network (N)" on page 29 describes these settings.

The following points describe important aspects of Telnet connections as they apply to the CAR-14.

- Telnet sessions utilize the same socket of the Ethernet Port that is required when sending Alarm messages to the alarm processing server. Accordingly, Alarm messages will be placed in a first-in-first-out (FIFO) queue while the Telnet session is active. Queued Alarms will be immediately transmitted when the session is terminated.

To avoid lengthy delays in the dispatch of Alarm messages, the duration of each Telnet session should be kept to a minimum.

- Telnet sessions will automatically terminate after 5 minutes of no activity. No activity is defined as data is neither being sent nor received via the Ethernet Port's Telnet connection. This action provides automatic recovery from network outages. Anytime after waiting 5 minutes, a new Telnet connection can be established.
- Access is controlled and determined by the Password used to log on. Access levels are described in the section entitled "Administrative and Restricted Passwords" on page 24.
- The data throughput rate using a Telnet connection will generally be superior to that of a Terminal Port connection. However, network conditions can severely impact the quality of Telnet connections.
- Telnet sessions are fully supported by the Union Pacific VPN.
- Identical sets of commands, sub-commands and menus are available to the Telnet and Terminal Port interfaces. However, since Remote Port Mode alters the use of the Terminal Port it is best to control its status while in a Telnet session. Refer to the section entitled "Remote Port (R)" for additional details.

OPERATIONAL COMMANDS

The Reporter's Main Menu includes three commands that can be used to access additional operational features. To execute these commands the user needs to log on. The Main Menu should be displayed as shown in the following.

```
MICRO-AIDE CAR-14 Alarm Reporter 1.06
C14sear2.v100

F Site Specific Information
L Live Status
C Time/Date
P Print Log
T Transfer Files
D Diagnostics
S Setup
R Remote Port
X Log Off
```

Main Menu

REMOTE PORT (R)

In many cases the Terminal Port of the CAR-14 will be used to provide a connection for a local PC user. This is referred to as Terminal Port Mode. However, the Terminal Port can also be connected to an alternate device co-located with the Reporter. This connection scheme and the feature that it supports is referred to as Remote Port Mode. A typical connection is illustrated in Figure 5 on page 38.

Remote Port Mode allows a user to access the user interface of the alternate device. The user must first launch a Telnet connection. Remote Port Mode can be enabled or disabled in an Administrative or Restricted Access session.

The detection and transmission of Alarm messages are not affected by Remote Port Mode. However, remote Telnet connections temporarily suspend the transmission of Alarm messages as described in "Connecting Remotely" on page 36.

CONNECTING THE ALTERNATE DEVICE TO THE TERMINAL PORT

Before connecting the ports the following conditions must be met.

- The Terminal Port of the CAR-14 is configured as DCE. If the port of the alternate device is DTE, use a one-to-one cable without an adapter. If the port of the alternate device is DCE, use a one-to-one cable with a null modem adapter. MICRO-AIDE provides a one-to-one cable with every CAR-14. The cable's wiring is illustrated in Figure 7 on page 52.
- The port of the alternate device must use 8-N-1 bit formatting.

4

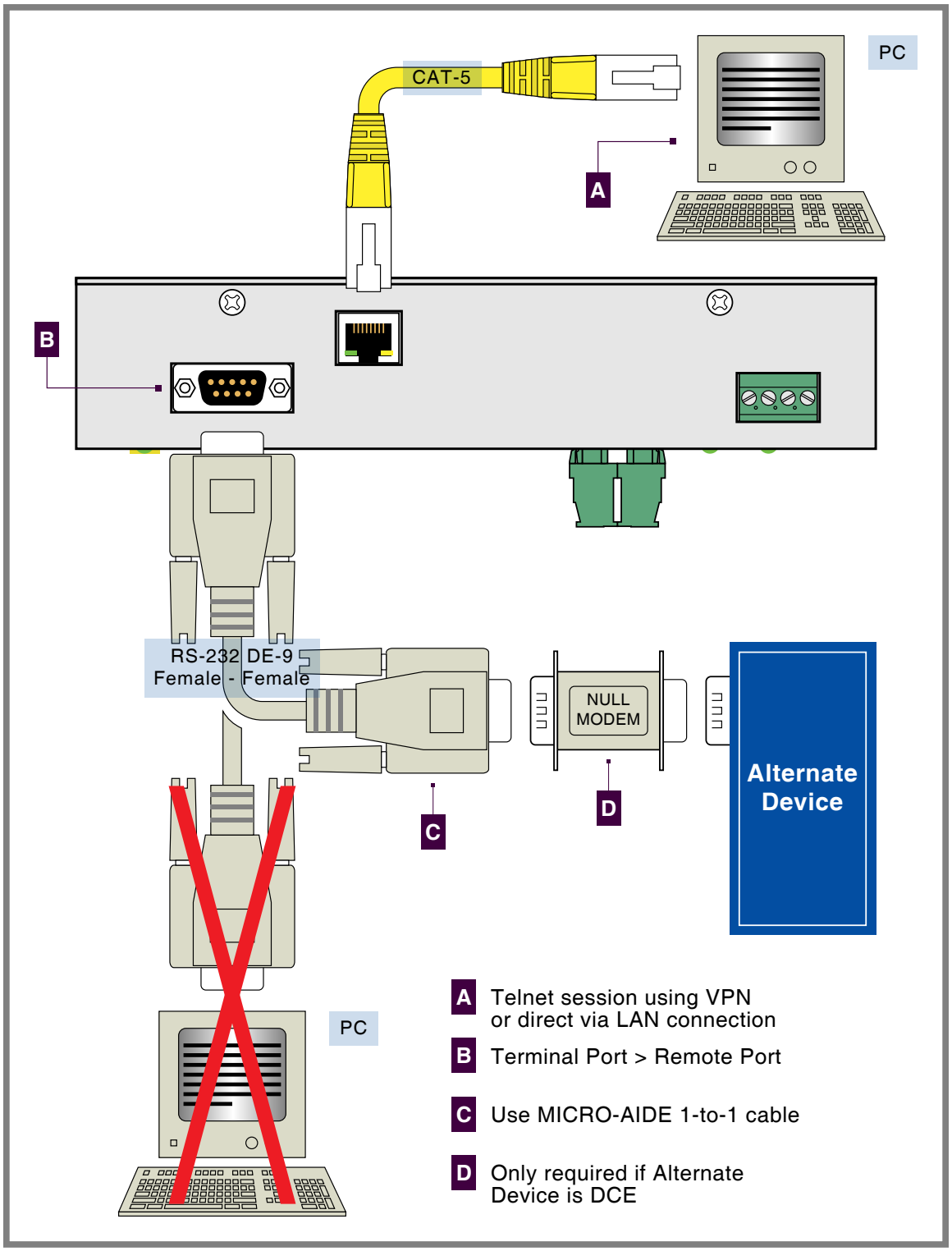

Figure 5: Remote Port Connection

- The port of the alternate device must support an ASCII data exchange consistent with the use of HyperTerminal or Tera Term.

The Reporter's Terminal Port utilizes a male DE-9 connector.

Once the physical connection to the alternate device is in place, the user can enable Remote Port Mode. Control of Remote Port Mode requires familiarity with three basic procedures. Each are described in the following sections.

ENABLE REMOTE PORT MODE

The remote user must perform each of the following steps in the order listed.

1. Establish a Telnet connection with the Reporter using HyperTerminal or Tera Term. Refer to the section entitled "Connecting Remotely" on page 36.

2. Log on to the Reporter. From the Main Menu select the Remote Port command. The following menu will be displayed.

```
                    Remote Menu

                 S Setup Remote Port
                 A Access Remote Port
```

Remote Port Command

3. Select the Setup Remote Port command. The following menu will be displayed.

```
                    Remote Port
                    -----------
Terminal Port Baud Rate   9600
Terminal Port Mode      Terminal
```

4. Highlight the Terminal Port Baud Rate field. Press the **Spacebar** key one or more times until the Baud rate of the alternate device is displayed.

5. Move the highlight to the Terminal Port Mode field. Press the **Spacebar** once. The setting will change to Remote.

6. Press the **Esc** key to return to the Remote Menu. Highlight the Access Remote Port command and press the **Enter** key. Remote Port Mode is now enabled. The following message confirms the change.

```
Beginning Remote Port access (exit with !!!)
```

7. The user is now connected to the alternate device. In general, keystrokes and commands issued by the user will be ignored by the Reporter and acted upon solely by the alternate device. This action will continue indefinitely until such time as the user terminates the session with the alternate device.

TERMINATE ALTERNATE DEVICE SESSION

To terminate the current alternate device session, perform either of the following actions.

- To terminate the alternate device session and Telnet connection simultaneously, perform a disconnect from within HyperTerminal or Tera Term. To once again dialog with the Reporter, a Telnet connection must be re-established.

- To terminate the alternate device session but retain the Telnet connection, press the **!** key three times in succession. Wait 1 second between each keystroke. The remote user will now dialog directly with the Reporter. The menu for the Remote Port Command will be displayed.

Using either method, Remote Port Mode will still be enabled. To launch a new session with the alternate device, select the Access Remote Port command described in step 6 of the previous section.

DISABLE REMOTE PORT MODE

To restore Terminal Port Mode, the remote user must disable Remote Port Mode. To do so, perform each of the following steps in the order listed.

1. Establish a Telnet connection with the Reporter using HyperTerminal or Tera Term. Refer to the section entitled "Connecting Remotely" on page 36.

2. Log on to the Reporter. From the Main Menu select the Remote Port command. The following menu will be displayed.

```
                    Remote Menu

                 S Setup Remote Port
                 A Access Remote Port
```

Remote Port Command

3. Select the Setup Remote Port command. The following menu will be displayed.

```
                    Remote Port
                    -----------
Terminal Port Baud Rate   9600
Terminal Port Mode        Remote
```

4. Move the highlight to the Terminal Port Mode field. Press the **Spacebar** once. The setting will change to Terminal. Remote Port Mode is now disabled and Terminal Port Mode resumes.

If no further alternate device sessions are required, the user may wish to disconnect the cable between the Terminal Port and alternate device. The port will again be available to a local PC user.

Front Panel Control of Remote Port Mode

Remote Port Mode can also be enabled and disabled by pressing the Maintainer Mode PB switch for 10seconds without interruption. The status will toggle with each successive action. Refer to the section entitled "Control of Remote Port Mode" on page 36 for additional details.

Live Status (L)

The Live Status feature provides the user with a continuously updated view of Alarm and Input status. It utilizes a single screen to convey Alarm, Digital, Analog and Virtual Input information.

To view the status information, select the Live Status command from the Main Menu. Data similar to the following will be displayed. Union Pacific's c14sear2.v100 Setup Database was used to provide the sample data.

```
[ESC]=exit                          Live Status                 11:17:20 06-04-12
            L01: Off 1B   XR      : Off    B1      :  13.1Vdc Off
            L02: Off 2B   D2      : Off    B2      :  13.9Vdc Off
            L03: Off 3B   AnaFail : Off    B3      :   0.0Vdc Off
            L04: Off 4B   HiTemp  : Off    B4      :   0.0Vdc Off
            L05: Off PR   GateProb: Off
            L06: Off PR   D6      : Off    V1      : Off
            L07: Off AR   D7      : Off    V2      : Off
            L08: Off TN   D8      : Off    V3      : Off
            L09: Off GC   D9      : Off    V4      : Off
            L10: On  LA   POR     : On     V5      : Off
            L11: Off                       V6      : Off
            L12: Off                       V7      : Off
            L13: Off                       V8      : Off
            L14: Off
            L15: Off
            L16: Off
            L17: Off
            L18: Off
            L19: Off
            L20: Off
```

Live Status Command

The first row always includes the name of the report and the current time. The latter is updated each second. The remainder of the screen is organized into three groups of information. Each group includes two or three columns of data. A description of each group and column is provided in the following sections.

ALARM STATUS

Alarm status comprises the first three columns of data. The first column lists the two-letter Alarm identification (i.e., L01 through L20). The second column reports the current status of the Alarm as either On or Off. The third column also reports the current Alarm status. It reports the status by listing the appropriate SetName or ClrName. In the sample data, Alarm L10 is On. Accordingly, its status is also reported as LA. Alarm identifications, SetName and ClrName are described in the section entitled "Alarm Configuration (L)" on page 32.

DIGITAL INPUT STATUS

The Input Name of each Digital Input is listed in the fourth column (e.g., XR). Input names are described in the section entitled "Input Names (I)" on page 26. The current On or Off status of each Digital Input is reported in the fifth column. In the sample data, the XR has been Off sufficiently long to cause the L10 Alarm to go On.

Digital Inputs are considered to be On or Off in accordance with the following definitions.

On–The Digital Input voltage is in the range from 9 to 36 Vdc.

Off–The Digital Input voltage is less than 2 Vdc.

ANALOG AND VIRTUAL INPUT STATUS

The status of Analog and Virtual Inputs is reported in the last three columns. The sixth column lists the Input Name (e.g., B1 and V1). The seventh column reports the voltage for each Analog Input. The On or Off status of each Virtual Input is reported below the voltage measurements. Finally, the eighth column reports the On or Off status of each Analog Input.

Analog and Virtual Inputs are considered to be On or Off in accordance with the following definitions.

On–The Analog Input level is outside the acceptable range as defined by the region between the Limit Values (refer to Figure 4 on page 17). The Virtual Input evaluates to a true logic state.

Off–The Analog Input level is within the acceptable range as defined by the region between the Limit Values. The Virtual Input evaluates to a false logic state.

PRINT LOG (P)

The CAR-14 maintains a Log of various activities. The Log will list single-line entries that identify the source of the entry. Additionally, each entry is date and time stamped. Entries are always listed in chronological order with the oldest entry listed first. The following activities are always logged.

- Health Check messages.
- On and off status changes in Maintainer Mode.
- If the internal temperature falls outside acceptable limits, a Log entry will be listed. High and Low Limit violations are logged. Refer to the section entitled "High and Low Temp Limits" on page 25 for additional details.
- The Reporter's real-time clock was synced to a time server.

The size of the Log is limited to 99 entries. New entries eventually overwrite old entries. Entries are time and date stamped using the hh:mm:ss mm/dd/yy format. A 24-hour clock is used.

The content of the Log is volatile. If power is removed from the Reporter, Log entries will be erased.

To view the Log, select the Print Log command from the Main Menu. A sample Log is shown in the following.

```
Event Log:
Maintainer Mode Off 06:17:37 06/04/12
SNTP Clock Sync  On 06:18:43 06/04/12
Hi Temperature   On 15:40:44 06/04/12
Hi Temperature  Off 16:10:50 06/04/12
SNTP Clock Sync  On 00:05:00 06/05/12
SNTP Clock Sync  On 00:05:00 06/06/12
SNTP Clock Sync  On 00:05:00 06/07/12
SNTP Clock Sync  On 00:05:00 06/08/12
SNTP Clock Sync  On 00:05:00 06/09/12
SNTP Clock Sync  On 00:05:00 06/10/12
Health Check     On 08:45:42 06/10/12
hit any key to continue
```

Print Log Command

The sample Log indicates that:

- Maintainer Mode was disabled at 06:17:37 on 6/4/2012.
- The Reporter's clock was manually synced at 06:18:43 on 6/4/2012. It was automatically synced 5 minutes past midnight on 6/5/12 through 6/10/12.
- The internal temperature exceeded its High Limit value at 15:40:44 on 6/4/2012.
- After approximately 30 minutes the temperature returned to within acceptable limits.
- On 6/10/2012 a Health Check message was transmitted.

After reviewing the Log, press any key to return to the Main Menu.

The next chapter describes maintenance practices applicable to the CAR-14. Trouble-shooting tips are provided that may be helpful in case the user encounters a problem.

Chapter 5 – Maintenance

Introduction

The primary purpose of this chapter is to describe the recommended trouble-shooting methods to be used with the CAR-14. It should be referred to if ever a questionable symptom arises during the operation of the Reporter.

The CAR-14 is designed to provide its user with many years of trouble-free operation. There are no user serviceable parts inside the unit. There are no consumable items or supplies that need to be replaced or replenished. The user may occasionally need to wipe dust away from the external surfaces of the unit. This should be done with a clean, dry cloth. The mechanical design of the chassis provides the internal electronic assemblies with a nearly sealed environment. Due to the low power consumption of the unit, ventilation holes are not required. The inside of the Reporter should remain clean indefinitely. Additionally, MICRO-AIDE printed circuit boards (PCBs) are sealed with a moisture and fungus resistant conformal coating.

Working Inside the Reporter

At the direction of MICRO-AIDE technicians, the user may have occasion to work inside the unit to replace a failed item. Observe the steps listed in the following before attempting any task that involves opening the unit. Refer to Figure 2 on page 8 and Figure 3 on page 9. They illustrate the front and top sides of the Reporter, respectively.

1. Remove power from the Reporter by detaching the connector labeled “Power” located along the top side of the Reporter.
2. Remove all of the Analog and Digital Input connectors and peripheral cables.
3. Remove the Reporter from the backboard or equipment rack.
4. Remove the two 6-32 1/4" screws from the top and bottom sides of the front assembly. The front and back portions of the Reporter can then be completely separated.

The task can now be performed safely. After the work is completed reassemble the Reporter by reversing the steps listed previously.

The Processor PCB is equipped with two potentiometers that are set and sealed at the factory. Do not attempt to alter these settings. Electrostatic discharges can cause serious damage to electronic components. When handling circuitry inside the Reporter it is recommended that the user wear a wrist grounding strap.

Replacing the Fuse

A single power fuse is mounted on the Processor PCB. The fuse is rated at 1 A and conforms to the 2AG size standard. Before replacing the fuse the cause of the blown fuse should be ascertained and cleared if possible. The fuse is illustrated in Figure 6 on page 44.

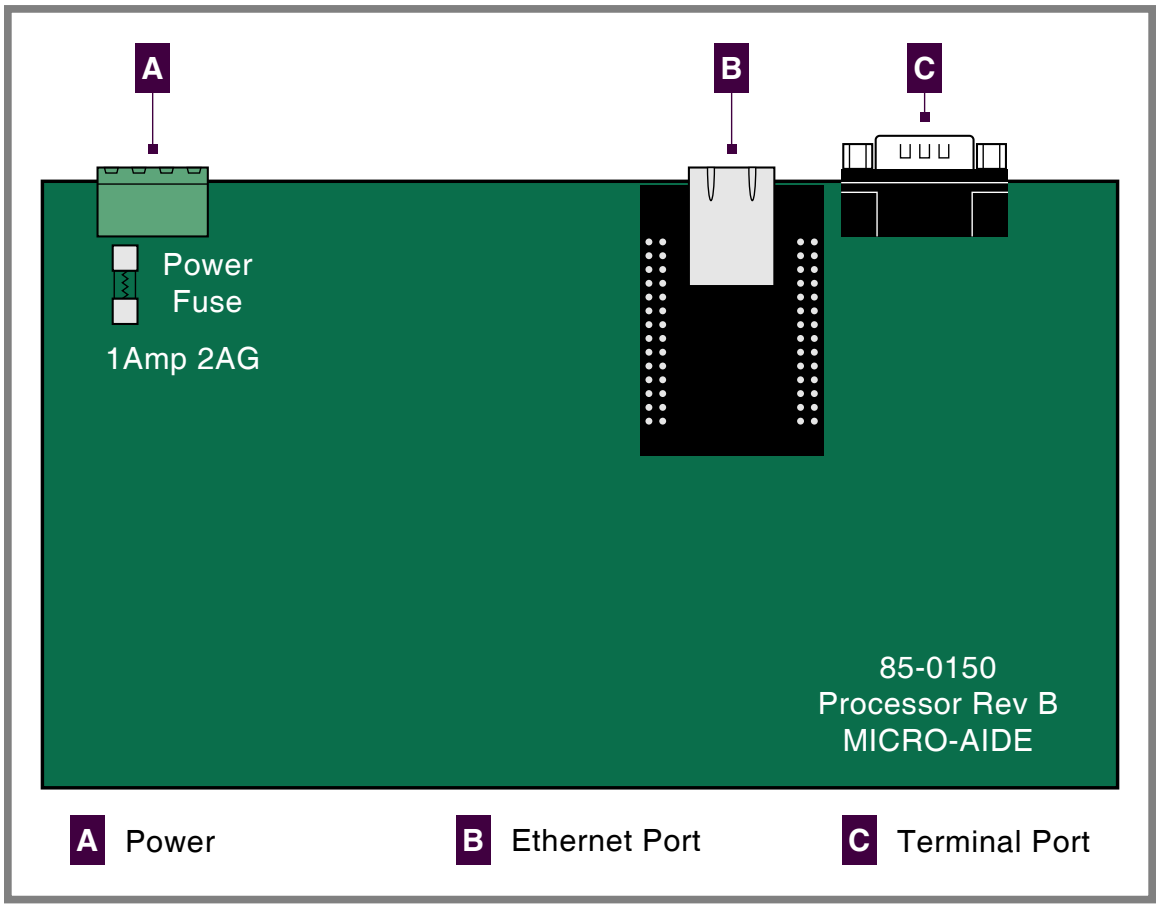

Figure 6: Processor PCB

Diagnostic Testing

The Main Menu of commands for the CAR-14 includes the Diagnostics command. Refer to the sample data entitled "Main Menu" on page 10. The Diagnostics command can be used to quickly verify the operational integrity of several hardware elements of the Reporter. Each of the six tests can be performed at any time. They are non-destructive and therefore will not alter the contents of the Setup Database.

The following menu of commands will be displayed in response to selecting the Diagnostics command.

```
System Diagnostics

C Checksum Test Program Memory
F Flash Memory Test
E Ethernet Test
H Send Health Check Message
T Temperature
L Light LEDs
```

Diagnostics Command

Each command performs a specific test. The tests are described in the following sections.

Checksum Test Program Memory (C)

The Program Memory Test reads every memory address location used to store the program code. As part of the reading process a checksum is calculated and displayed at the completion of the test. The same checksum must be calculated each time the test is performed. Either GOOD or BAD will be reported at the completion of the test.

A typical response to the Program Memory Test is listed in the following.

```
Program Memory Checksum=6cf0
                        GOOD

     Test Complete
Press any key to continue
```

Program Memory Test

The checksum takes only a moment to calculate. The checksum value of 6cf0 in the previous example will vary with the version of the firmware installed in the Reporter.

FLASH MEMORY TEST (F)

The Flash Memory Test is performed on the non-volatile memory used to store the Setup Database. The test verifies that the microprocessor can properly access the memory.

A typical response to the Flash Memory Test command is listed in the following.

```
Flash Memory1: 4096K


     Test Complete
Press any key to continue
```

Flash Memory Test

The test should report a memory size of 4096K. A failure has been detected if 0K is reported.

ETHERNET TEST (E)

The Ethernet Test can be performed at any time to verify that the microprocessor can communicate properly with the Ethernet Port. The test can be performed while the port is active or idle.

Assuming the Ethernet Port is operating properly, the following message will be reported.

```
Ethernet Okay


     Test Complete
Press any key to continue
```

Ethernet Test

Okay is used to indicate a successful test. Not installed is used to indicate a failure.

The Ethernet Test does not test for VPN or LAN communications. For this reason, MICRO-AIDE recommends that a ping test also be performed.

SEND HEALTH CHECK MESSAGE (H)

The Send Health Check Message test allows the user to check if the Reporter can deliver messages to the message processing server. Successful deliveries and failures are indicated by messages displayed in the following sections. Message responses are reported shortly after the test is initiated.

```
Sending Health Check message
Message delivered OK
```

Send Health Check Message Command - Success

Automatically issued or user-initiated, Health Check messages are sent once if they succeed in being delivered. If the message fails, four additional attempts are made. Each successive attempt is delayed 2 minutes. A maximum of five attempts are made before a failure is declared.

If the message is able to be sent, but fails, the following response will be displayed.

```
Sending Health Check message
Message delivery failed
```

Send Health Check Message Command-Failure

Health Check messages will not be sent while Maintainer Mode is active. The following response is displayed to indicate this condition.

```
Sending Health Check message
Maintainer Mode (Health Check Pending)
```

Alarms messages that are pending delivery will also block the transmission of Health Check messages. This condition is noted by the following response.

```
Cannot send, alarm delivery in progress


Test Complete
Press any key to continue
```

Health Check messages that cannot be sent while the 2-minute delay is in effect are noted by the following response. The displayed timer value will count down each second.

```
Sending Health Check message
Waiting 01:53, last attempt no connect
```

Temperature (T)

The Temperature Test simply reports the temperature inside the Reporter.

A typical response to the Temperature Test command is listed in the following. The temperature is always reported in degrees Fahrenheit.

```
Unit Temperature  85 Degrees F


Test Complete
Press any key to continue
```

Temperature Test

The measured temperature inside the CAR-14 will generally be 5°F to 10°F warmer than the surrounding ambient temperature. Temperature readings should never exceed 180°F.

Light LEDs (L)

The CAR-14 includes 10 LEDs that are used to indicate the status of each Digital Input. The LEDs are further described in the section entitled "Digital Input Indicators" on page 35. Select the Light LEDs command to test the indicators. The LEDs will be illuminated for 5seconds. The test will complete automatically.

The user may wish to contact MICRO-AIDE customer service if a failure occurs as the result of any diagnostic testing. Instructions on how to proceed will be offered. The MICRO-AIDE "Material Return" and "Limited Warranty" policies are described on the inside back cover of this manual.

Updating the Firmware

Like any microprocessor-based product, the CAR-14 executes a stored memory program. The program, referred to as firmware, is saved in flash memory. Flash memory is uniquely characterized by its permanent storage and multiple write properties. Its use allows the CAR-14 firmware to be updated to a newer version by simply uploading a new program file. The once common practice of shipping and replacing a

Programmable Read Only Memory (PROM) chip does not apply to the CAR-14. Consequently, there is no need to open the unit to gain access to the Processor PCB.

The firmware update procedure, described in this section, must be performed via a PC connected either locally or remotely to the Terminal Port or Ethernet Port.

Occasionally a new firmware release will be incompatible with the Reporter's existing Setup Database. When this happens the existing database will have to be erased and a new one created. Incompatibilities, if any, are listed in Table 2 on page 4. It should always be reviewed before proceeding with an update.

The steps necessary to complete the firmware update depend upon which communications application is being used. The following example describes the HyperTerminal method. HyperTerminal 7.0 was used in the following procedure. Other versions of this program may be slightly different. However, the fundamental approach will remain valid.

1. The user must be online with the Reporter and the Main Menu should be displayed. Refer to the sample data entitled "Main Menu" on page 10.
2. From the Main Menu select the Transfer Files command. The following sub-menu of commands will be displayed.

```
File Transfer

D Download Setup Data CAR to PC
U Upload Setup Data PC to CAR
F Firmware Upload
```

Transfer Files Command

3. Select the Firmware Upload command. The following warning will be displayed.

```
Are you SURE you want to upload new Firmware?
No Yes
```

4. To proceed select Yes. The following additional warning will be displayed.

```
OK to erase Firmware and upload new Firmware in Intel HEX format?
No Yes
```

5. To proceed select Yes. A final precaution will be displayed as follows.

```
Do you want to ABORT this operation
No Yes
```

6. To proceed select No. After a short delay the following message will be displayed.

```
Please send Intel HEX file now.
```

7. Within the HyperTerminal window, click on the Transfers command, then the Send Text File... command. The Send Text File dialog box will open.
8. In the drop down list box select All files (*.*) as the type of file to display.
9. Select the correct disk drive, folder and filename (e.g., CAR-14 V106.hex). If the various settings are correct click on the Open button.
10. The progress of the upload will be indicated by a sequence of period (.) characters.
11. The update will terminate automatically after a few minutes. The following message will indicate a successful file transfer.

```
Done!
Press ESC to continue
```

12. Press the **Esc** key as instructed. The following message will be displayed.

```
Do you want to restart the CAR-14 alarm reporter?
No Yes
```

13. Select Yes to initialize the new firmware. At the conclusion of the initialization the user will be asked to log on.

After completing the firmware update procedure it may be necessary to execute the Reset System command. A reset should be performed only if recommended by MICRO-AIDE customer service technicians. Refer to the section entitled "Reset Setup (R)" on page 22.

Trouble-Shooting Guide

The following guide is provided to assist the user in resolving problems that may occur with the operation of the CAR-14. It can be especially helpful when attempting to operate the Reporter for the first time. Procedures for resolving both local and remote problems are listed. Where multiple steps are indicated it is recommended that they be performed in the order listed.

If the user is unable to resolve the problem, MICRO-AIDE customer service technicians should be contacted. The user will be asked to state the problem, related symptoms, and indicate any operations or conditions that have a bearing on the problem. If available, the results of any diagnostic tests should be reported.

Symptom or Problem	Resolution
No indication of power.	Verify 9 to 36 Vdc at B and N power terminals. Inspect fuse on Processor PCB.
PC does not display data when connected to the Terminal Port.	Check cable connection to Terminal Port. Verify cable is assembled per Figure 7 on page 52. Check Baud rate setting. Check if Terminal LED on front panel illuminates.
Terminal Port data at PC is garbled.	Check Baud rate setting. Verify following setting: 8 data bits, 1 start bit, 1 stop bit.
Highlight cannot be moved using PC arrow keys.	Set PC for ANSI emulation.
PC does not communicate via Ethernet Port when directly connected.	Verify Reporter's IP Address and Port Number are correctly assigned and properly targeted by the PC. Verify PC's Ethernet Port is configured properly. Verify PC's communications application is set up for TCP / IP protocol and Telnet. Verify CAT-5 cable is being used.
Setup Database transfer fails via Ethernet Port connection.	Verify text file transfer protocol is being used. Initiate a Telnet session to test Ethernet Port connection.
SNTP fails to provide accurate clock control.	Verify time server supports SNTP-Unicast and SNTP Server address is valid.

Table 5: Guide to Trouble-Shooting Techniques

Symptom or Problem	Resolution
Real-time clock is incorrect by one or more hours even when SNTP clock syncing is functional.	Verify correct Daylight Saving Time and Time Zone settings.
Initial Check-Out Procedure fails on all inputs.	Check inputs by inspecting front panel LEDs and/or using Live Status command. Verify polarity of test voltage is applied correctly. Verify Detection Times are not set to zero or too long.
Alarms are not being created on some inputs.	Check wiring, especially polarity. Set Detection Time to shorter value. Verify Detection Times are not set to zero. Verify proper settings in Alarm Configuration Table. Reload Setup Database.
Negative Analog Input voltage is not reported, measures 0.	Only positive voltages are reported in the range of 0 to +51.1 Vdc.
AC analog readings are incorrect.	Only DC voltages are measured.
DC analog readings are not tracking voltage changes.	Reassign the analog Filter setting to Fast.
Upload / Download of Setup Database fails.	Verify text file transfer protocol is being used.
Alarm and Health Check messages are not being sent successfully.	Check Network settings. Verify Raven X is using a correct template. Perform a ping test of the Reporter's Ethernet Port.

Table 5: Guide to Trouble-Shooting Techniques

5

This completes the User Manual for the CAR-14. As an aid to the user two appendices have been provided. The first lists detailed specifications. The second provides a functional description of the Alarm Configuration Table that is a part of the c14sear2.v100 Setup Database.

Any comments the reader may have on how to improve this manual are welcomed. Comments should be forwarded to the Director of Marketing, MICRO-AIDE Corporation.

User Notes

Appendix A – Technical Data

Specifications

Physical
Size
Length: 8.2"
Height: 5.9"
Depth: 2.6"
Weight
1.3 lb.

Environmental
Storage
Temperature: -50 °C to 85 °C
Humidity: 0 to 95 %, non-condensing
Operating
Temperature: -40 °C to 72 °C
Humidity: 0 to 95 %, non-condensing

Mounting
Shelf or backboard

Construction
Chassis
Fully enclosed, anodized aluminum
Externally accessible LEDs and connectors
Electrical
All components mounted on conformal coated, internal PCB

Power
Voltage
Range: 9 to 36 Vdc
Consumption
Maximum: 2 W

Isolation
Power Terminals, Digital and Analog Inputs, Ethernet Port
Minimum: 3800 Vdc to chassis and any terminal

Alarms
Quantity: 20 total, appropriate for crossing applications, user-defined
Types: Set, Cleared and periodic Health Check
Definitions
User-assigned inputs and input states qualify each Alarm
User-assigned time durations validate each Alarm
Transmission
Sent to Union Pacific message processing server via Union Pacific VPN or LAN
Operating Modes
Automatic: messages sent via VPN or LAN using DNS or fixed IP Addressing
Maintainer Mode: disables Alarm transmission while crossing is being tested or repaired

Inputs
Types
Digital: 10, all opto-isolated
Analog: 4 total, voltage only
Virtual: 8, user assigned
Input Impedances
Digital: minimum 10 KOhms
Analog: minimum 10 MOhms
Range
Digital Input-On: 9 to 36 Vdc
Digital Input-Off: 0 to 2 Vdc
Analog Voltage: 1 scale, 0 to +51.1 Vdc
Validation Times
Digital: .001 to 32.767 seconds
Analog: as defined by Alarm Configuration Table, 0 to 99,999 seconds

Analog Limit Values
High and Low Limits: 0 to 51.1 Vdc in multiples of .1 Vdc

Analog Input Accuracy
Typical: ±.15 Vdc

Temperature Sensing
Usage: measures and logs abnormal internal chassis temperatures
High and Low Limits: -67 °F to 257 °F

Virtual Inputs
Usage
Can be used as Set or Clear Input in Alarm Configuration Table
Definitions
Any logical association shared by 1 to 4 variables (i.e., Digital, Analog or other Virtual Inputs)
Assigned by defining the state of the Virtual Input for each combination of variable states

Ports
RS-232
Quantity: 1, for use with a PC
Terminal Emulation: ANSI
Baud Rates: 300 to 115,200
Bit Format: 8-N-1
Ethernet
Type: 10/100 Base-T, typically connected to cellular modem or directly to LAN
Protocols: HTTP-Get, TCP/IP, Telnet, SNTP-Unicast
User interface: provides remote or local access via TCP/IP Telnet connection
Settings: user assignable IP Address, Telnet port, sub-net mask, dual IP Addresses for time server

Indicators and Controls
System Status LEDs (5)
Power, Message Sent, Terminal: green
Alarm: red, illuminates when one or more Alarms are active
Maintainer Mode: yellow
Input Status LEDs (10)
Digital Inputs 1-10: green, illuminates when input is on
Maintainer Mode Pushbutton
Controls Maintainer and Remote Port Modes

Memory
All Setup Database parameters and logged data are completely non-volatile with loss of power

Internal Clock
Accuracy
Typical: ±8 seconds per month (3 ppm) when not synchronized
Volatility: maintains accuracy for minimum of 30 days with loss of power
Sync
SNTP-Unicast: via primary or secondary time servers, once per day at 00:05:00
Operation
Time Zones: selectable from 7 different North American settings
Daylight Saving Time: enable or disable automatic adjustment
Leap Year: automatically adjusted

Password Protection
Administrative Level
Access: unrestricted to all functions
Length: 8 characters
Restricted Level
Access: modifications restricted to site-specific parameters of Setup Database, unrestricted viewing of all data and Setup Database parameters
Length: 8 characters

MICRO-AIDE reserves the right to make changes, at its sole discretion, to any specification listed herein.

A

Terminal Port Cable

The following cable is included with every CAR-14.

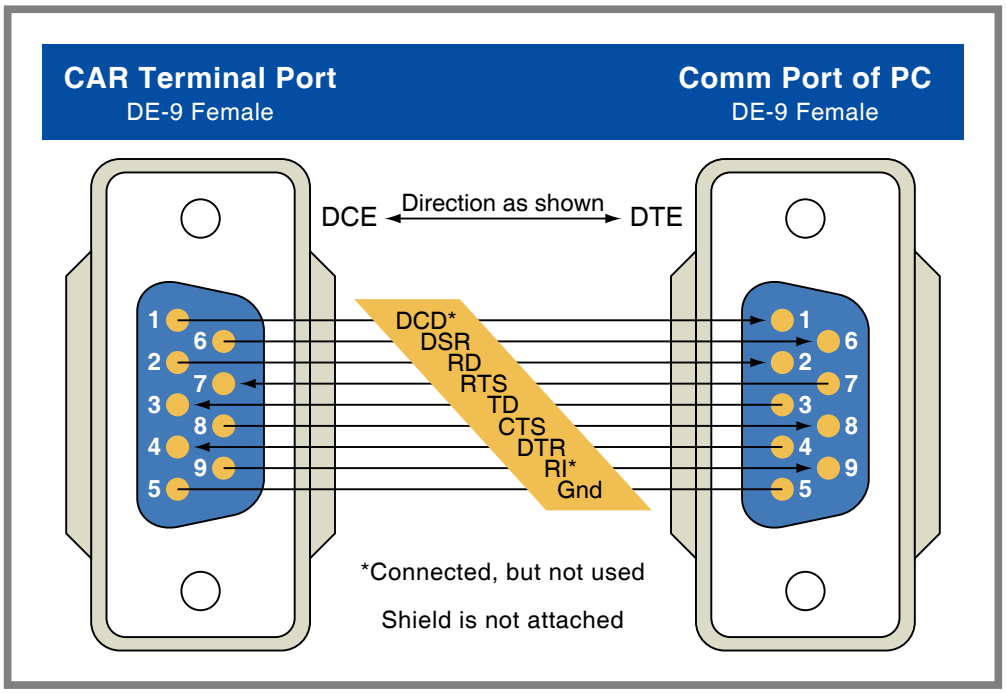

Figure 7: Terminal Port Cable - Wiring Diagram

A

Appendix B – Alarm Configuration Table

Introduction

More than any other feature, the Alarm Configuration Table (ACT) establishes the operational aspects of the CAR-14. It is used to decide which crossing faults or conditions will be reported as Alarm messages. It follows that the ACT is a key aspect of the Setup Database. This Appendix provides a detailed description of the ACT as it is defined in Union Pacific's c14sear2.v100 Setup Database.

Alarm Definitions

The following sample data is from the ACT included in the c14sear2.v100 Setup Database. The section entitled "Alarm Configuration (L)" on page 32 provides a detailed description of how to prepare the ACT.

Alarm Configuration

	SetInp	SetState	SetTime	SetName	ClrInp	ClrState	ClrTime	ClrName	MaintClr
L01	A01	On	600	B1	A01	Off	300	1B	No
L02	A02	On	600	B2	A02	Off	300	2B	No
L03	A03	On	600	B3	A03	Off	300	3B	No
L04	A04	On	600	B4	A04	Off	300	4B	No
L05	D10	Off	1800	IP	D10	On	300	PR	No
L06	D10	Off	7200	PK	D10	On	300	PR	No
L07	D03	On	5	AF	D03	Off	5	AR	No
L08	D04	On	5	TP	D04	Off	5	TN	No
L09	D05	On	5	GT	D05	Off	5	GC	No
L10	D01	Off	1800	LA	D01	On	10	CL	Yes
L11	---	Off	0		---	Off	0		No
L12	---	Off	0		---	Off	0		No
L13	---	Off	0		---	Off	0		No
L14	---	Off	0		---	Off	0		No
L15	---	Off	0		---	Off	0		No
L16	---	Off	0		---	Off	0		No
L17	---	Off	0		---	Off	0		No
L18	---	Off	0		---	Off	0		No
L19	---	Off	0		---	Off	0		No
L20	---	Off	0		---	Off	0		No

Alarm Configuration Table

The c14sear2.v100 Setup Database defines ten Alarms. They are identified as L01 through L10. A description of each Alarm is provided in Table 6 on page 54. The table lists Digital Input states as either On or Off. These states are defined as follows.

On–The Digital Input voltage is in the range from 9 to 36 Vdc for a duration greater than 1 second.

Off–The Digital Input voltage is less than 2 Vdc for a duration greater than 1 second.

Issue	ID	Type	Name	Description
Battery	L01	Set	B1	Sets B1 Alarm when Analog Input 01 voltage is below 10.4 Vdc or above 15.6 Vdc for 10 minutes.
		Clear	1B	Clears B1 Alarm when Analog Input 01 voltage is between 10.4 Vdc and 15.6 Vdc for 5 minutes.
Battery	L02	Set	B2	Sets B2 Alarm when Analog Input 02 voltage is below 11.2 Vdc or above 16.8 Vdc for 10 minutes.
		Clear	2B	Clears B2 Alarm when Analog Input 02 voltage is between 11.2 Vdc and 16.8 Vdc for 5 minutes.
Battery	L03	Set	B3	Sets B3 Alarm when Analog Input 03 voltage is above 20.0 Vdc for 10 minutes.
		Clear	3B	Clears B3 Alarm when Analog Input 03 voltage is below 20.0 Vdc for 5 minutes.
Battery	L04	Set	B4	Sets B4 Alarm when Analog Input 04 voltage is above 20.0 Vdc for 10 minutes.
		Clear	4B	Clears B4 Alarm when Analog Input 04 voltage is below 20.0 Vdc for 5 minutes.
Power out (short duration)	L05	Set	IP	Sets IP Alarm when POR (Digital Input 10) is Off for 30 minutes.
		Clear	PR	Clears IP Alarm when POR (Digital Input 10) is On for 5 minutes.
Power out (long duration)	L06	Set	PK	Sets PK Alarm when POR (Digital Input 10) is Off for 2 hours.
		Clear	PR	Clears PK Alarm when POR (Digital Input 10) is On for 5 minutes.
AC failure	L07	Set	AF	Sets AF Alarm when AnaFail (Digital Input 03) is On for 5 seconds.
		Clear	AR	Clears AF Alarm when AnaFail (Digital Input 03) is Off for 5 seconds.
Excessive temperature	L08	Set	TP	Sets TP Alarm when HiTemp (Digital Input 04) is On for 5 seconds.
		Clear	TN	Clears TP Alarm when HiTemp (Digital Input 04) is Off for 5 seconds.
Gate problem	L09	Set	GT	Sets GT Alarm when GateProb (Digital Input 05) is On for 5 seconds.
		Clear	GC	Clears GT Alarm when GateProb (Digital Input 05) is Off for 5 seconds.
Crossing active too long	L10	Set	LA	Sets LA Alarm when XR (Digital Input 01) is Off for 30 minutes.
		Clear	CL	Clears LA Alarm when XR (Digital Input 01) is On for 10 seconds.

Table 6: Alarm Descriptions

B

Material Return

In the event the customer identifies a malfunction in any product, call or write MICRO-AIDE and obtain a Return Material Authorization (RMA) number from the customer service department. Return the product to MICRO-AIDE, freight prepaid, with a note (in-warranty repair) or a purchase order (out-of-warranty) for the repair listing the following information:

- RMA number issued by MICRO-AIDE
- Return shipment address
- Name and e-mail address or telephone number of person familiar with the problem
- Brief description of the problem (include any printouts that may have a bearing on the problem)
- Method of payment for repair costs (out-of-warranty)
- Send product to the following address:

Micro-Aide Corporation

685 Arrow Grand Circle
Covina, CA 91722
Tel: 626-915-5502 Fax: 626-331-9484
E-mail: support@micro-aide.com

Limited Warranty

MICRO-AIDE warrants its products to be free from defects in material and workmanship for a period of five (5) years from the date of shipment. This warranty is in lieu of any other warranty, expressed or implied. In no event shall MICRO-AIDE be held liable for incidental or consequential damage resulting from (1) the use of any of its products, or (2) any alleged breach of this warranty provision. MICRO-AIDE's liability shall be limited to repairing or replacing, at its sole discretion, any defective product which is returned in accordance with the MICRO-AIDE Material Return Policy.

Product that has been subjected to abuse, misuse, alteration, accident, lightning damage, neglect or unauthorized installation or repair shall not be covered by this warranty. MICRO-AIDE reserves the right to make a final decision as to the existence of any failures and the cause of such failures. No warranty is made with respect to custom equipment or products produced to buyer's specifications except as mutually agreed upon in writing.

Micro-Aide Corporation
685 Arrow Grand Circle
Covina, CA 91722
Tel: 626-915-5502 Fax: 626-331-9484
E-mail: support@micro-aide.com